US010852085B2

(12) **United States Patent**
Cleary et al.

(10) **Patent No.: US 10,852,085 B2**
(45) **Date of Patent: Dec. 1, 2020**

(54) **DELINKER MECHANISM FOR CHAIN-DRIVEN MACHINE GUN**

(71) Applicants: **Michael Morency Cleary**, Carpinteria, CA (US); **James M Cleary**, Sherman Oaks, CA (US)

(72) Inventors: **Michael Morency Cleary**, Carpinteria, CA (US); **James M Cleary**, Sherman Oaks, CA (US)

(*) Notice: Subject to any disclaimer, the term of this patent is extended or adjusted under 35 U.S.C. 154(b) by 0 days.

(21) Appl. No.: **16/511,875**

(22) Filed: **Jul. 15, 2019**

(65) **Prior Publication Data**

US 2020/0096270 A1 Mar. 26, 2020

Related U.S. Application Data

(63) Continuation-in-part of application No. 16/378,264, filed on Apr. 8, 2019, now abandoned, which is a continuation of application No. 16/101,493, filed on Aug. 12, 2018, now abandoned, which is a continuation-in-part of application No. 15/887,111, filed on Feb. 2, 2018, now abandoned.

(60) Provisional application No. 62/453,692, filed on Feb. 2, 2017.

(51) **Int. Cl.**
F41A 7/08 (2006.01)
F41A 9/31 (2006.01)
F41A 17/18 (2006.01)

(52) **U.S. Cl.**
CPC ***F41A 9/31*** (2013.01); ***F41A 7/08*** (2013.01); *F41A 17/18* (2013.01)

(58) **Field of Classification Search**
CPC F41A 9/31; F41A 7/08; F41A 17/18
USPC 89/33.25
See application file for complete search history.

(56) **References Cited**

U.S. PATENT DOCUMENTS

2,375,219 A * 5/1945 Gentry F41A 9/30 89/33.25
2,388,291 A * 11/1945 Ruger F41A 5/18 89/33.25

(Continued)

OTHER PUBLICATIONS

Microsoft's Sculpt Ergonomic Keyboard, webpage https://marco.org/2013/08/30/sculpt-ergonomic-keyboard-review, downloaded Apr. 25, 2017.

(Continued)

Primary Examiner — Samir Abdosh
(74) *Attorney, Agent, or Firm* — Guy Cumberbatch

(57) **ABSTRACT**

A compact 50 caliber machine gun system which utilizes an original Browning rear-stripping ammunition link design. The chain-driven machine gun system features a delinker assembly configured to receive a belt of linked cartridges, separate each of the cartridge from the belt rearwardly, and feed each of the cartridges for firing. The delinking function is separated from the motion of the bolt assembly so as to reduce the overall length of the gun system. The receiver has a receiver mounting length RML from the rear base of each incoming cartridge in a belt of connected links to the rear end of the receiver that is less than 15 inches. A shuttle feed system is incorporated into the basic chain gun style mechanism which had been limited to a sprocket feed on all previous designs. An electronic anti-hangfire system uses a single proximity switch and the already existing parts and motions of the gun.

22 Claims, 35 Drawing Sheets

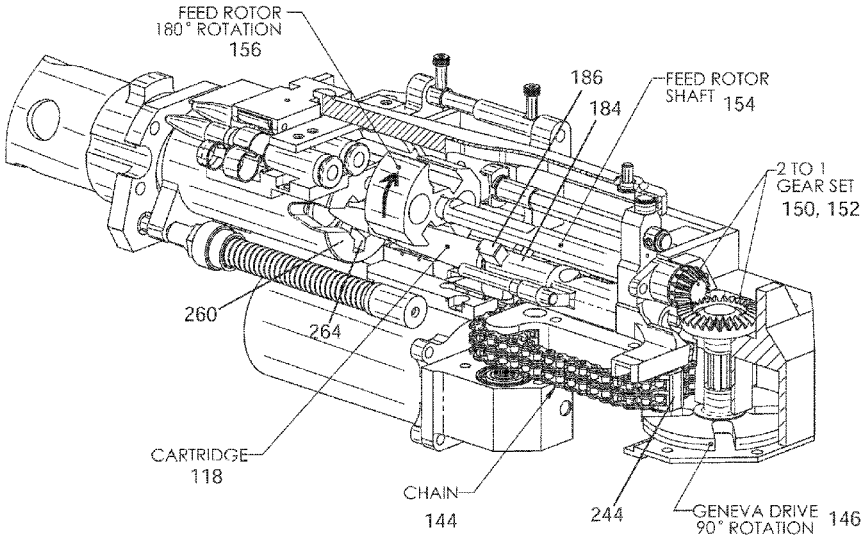

(56) **References Cited**

U.S. PATENT DOCUMENTS

2,436,370	A *	2/1948	Alexander	F41A 9/30 89/33.25
2,972,286	A *	2/1961	Marquardt	F41F 1/08 89/126
2,993,414	A *	7/1961	Woodman	F41A 9/31 89/33.25
3,834,272	A *	9/1974	Patenaude	F41F 1/10 89/12
4,038,904	A *	8/1977	Rocha	F41A 9/31 89/33.03
4,301,709	A *	11/1981	Bohorquez	F41A 17/18 89/11
4,418,607	A *	12/1983	Price	F41A 9/30 89/11
4,481,858	A *	11/1984	Price	F41A 9/30 89/11
4,563,936	A	1/1986	Cleary	
4,587,879	A *	5/1986	Savioli	F41A 9/55 89/33.04
9,618,284	B1 *	4/2017	Hoffman	F41A 3/66
9,638,483	B1 *	5/2017	Hoffman	F41A 3/14
9,702,649	B1 *	7/2017	Hoffman	F41A 3/14
10,352,638	B1 *	7/2019	Day	F41A 9/38
2011/0290103	A1 *	12/2011	Herrmann	F41A 9/51 89/18
2019/0339034	A1 *	11/2019	Day	F41A 9/32
2020/0096270	A1 *	3/2020	Cleary	F41A 9/31

OTHER PUBLICATIONS

Custom Keyboard for Apple products, webpage—https://developer.apple.com/library/content/documentation/General/Conceptual/ExtensibilityPG/CustomKeyboard.html, downloaded Apr. 25, 2017.

Custom Keyboard for Android products, webpage—https://code.tutsplus.com/tutorials/create-a-custom-keyboard-on-android--cms-22615, downloaded Apr. 25, 2017.

Coding-Keyboard-App, Google Play Store entry—https://play.google.com/store/apps/details?id=com.gazlaws.codeboard&hl=en, downloaded Apr. 24, 2017.

Toms_Guide-best-android-keyboards, webpage—https://www.tomsguide.com/us/pictures-story/403-best-android-keyboard-apps.html#s17, available Jul. 29, 2017.

* cited by examiner

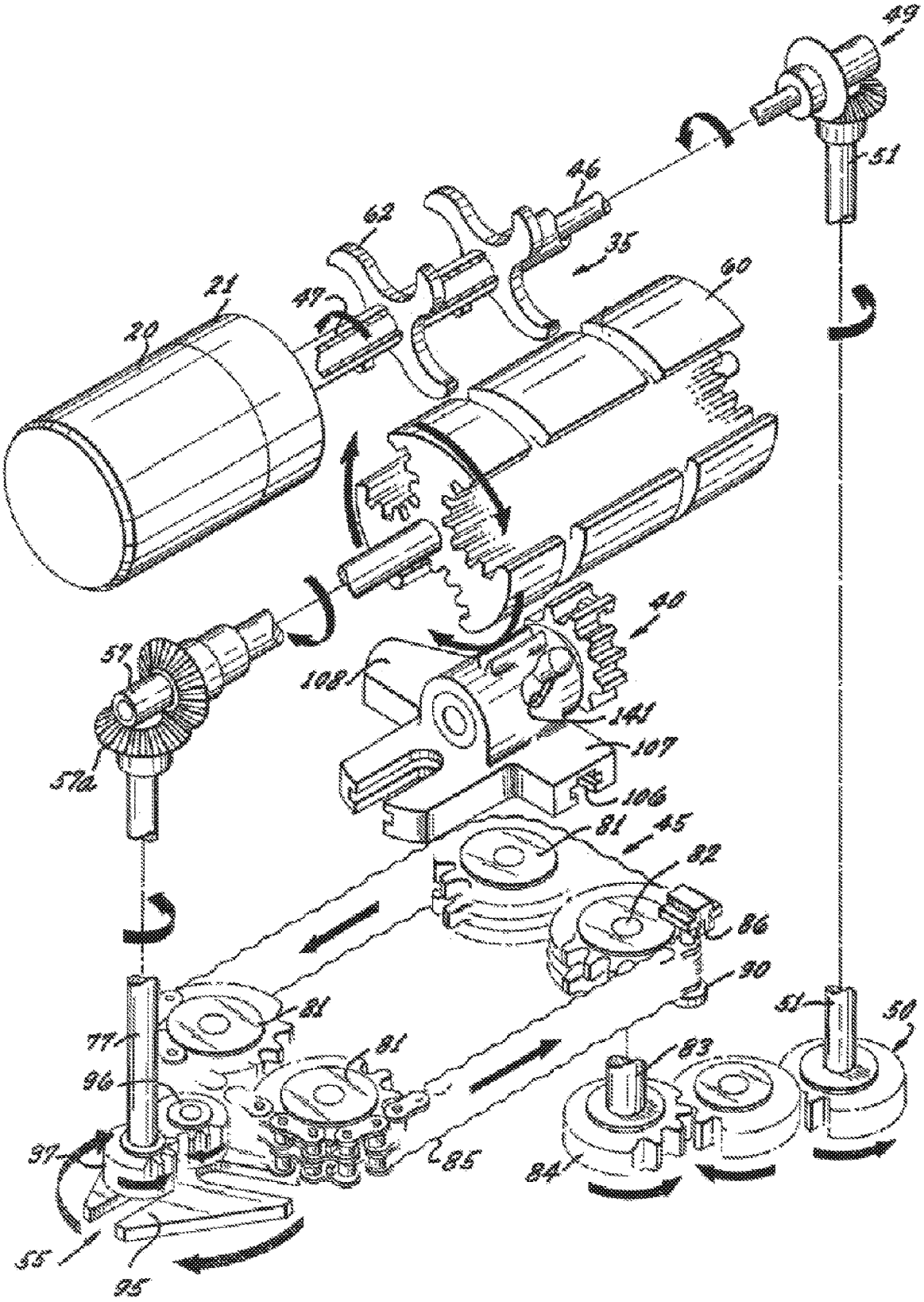

Fig. 1 (PRIOR ART)

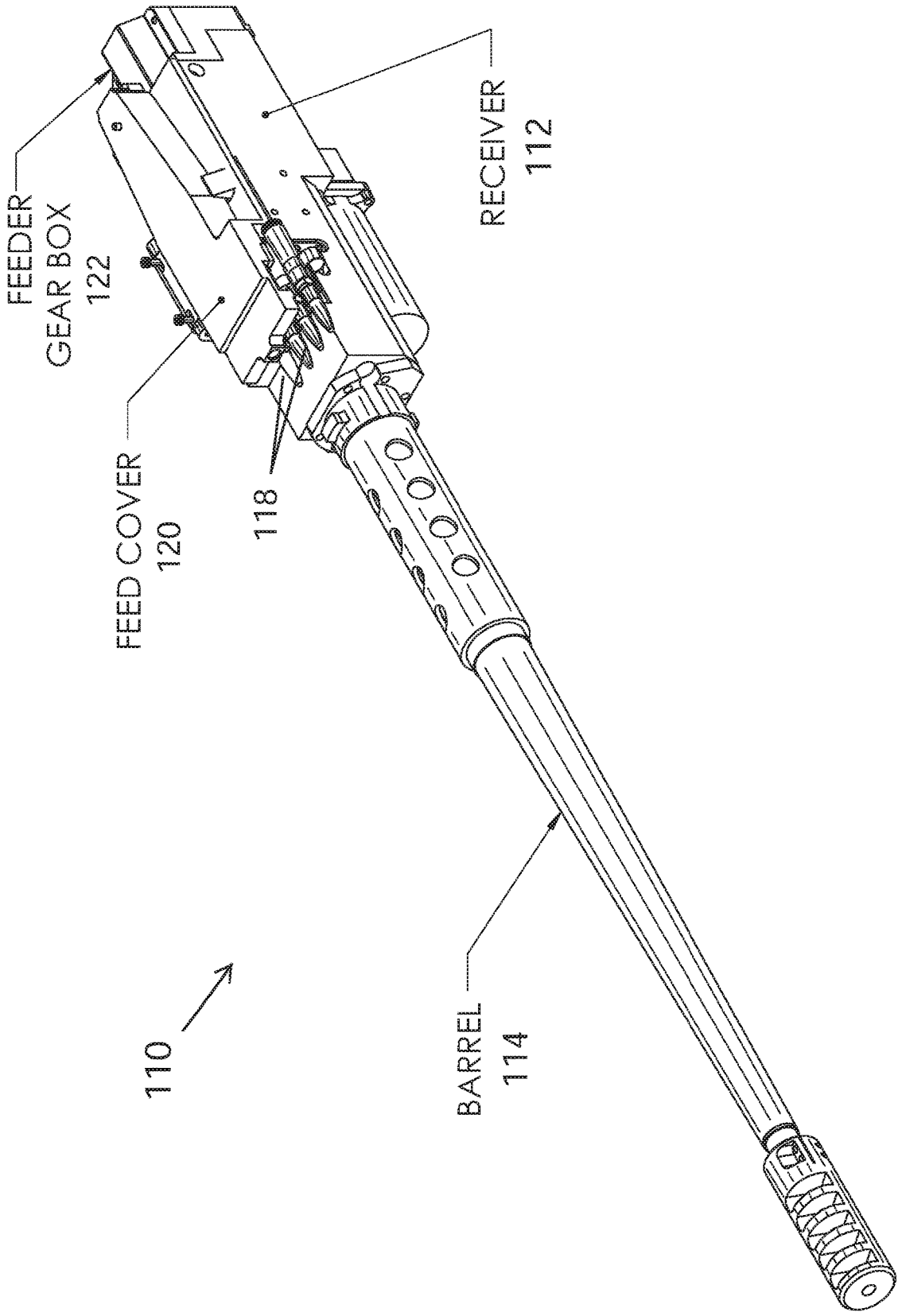
FEEDER GEAR BOX 122
RECEIVER 112
FEED COVER 120
118
110
BARREL 114

Fig. 2A

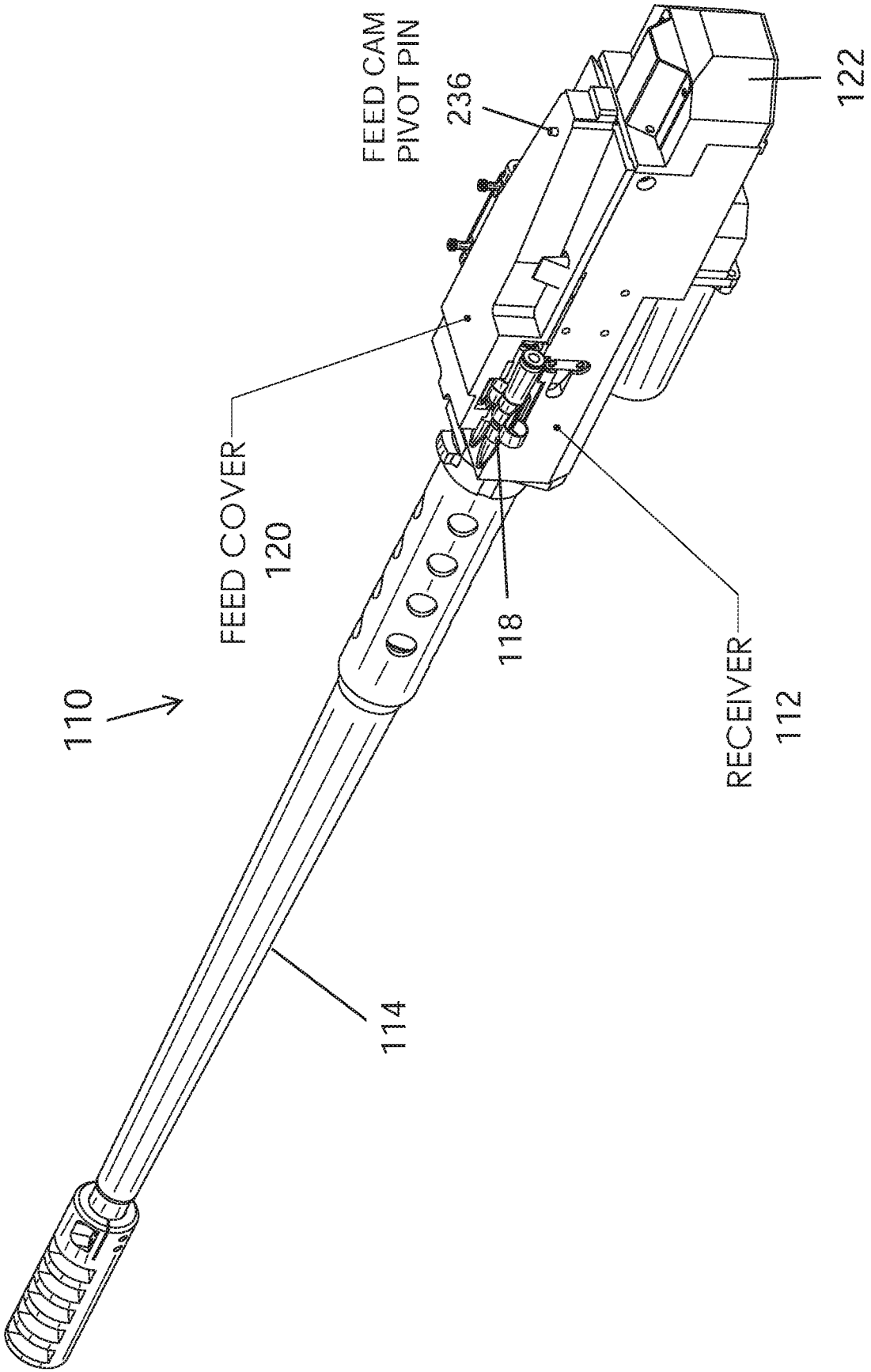
FEED CAM
PIVOT PIN
236
122
FEED COVER
120
118
110
RECEIVER
112
114

Fig. 2B

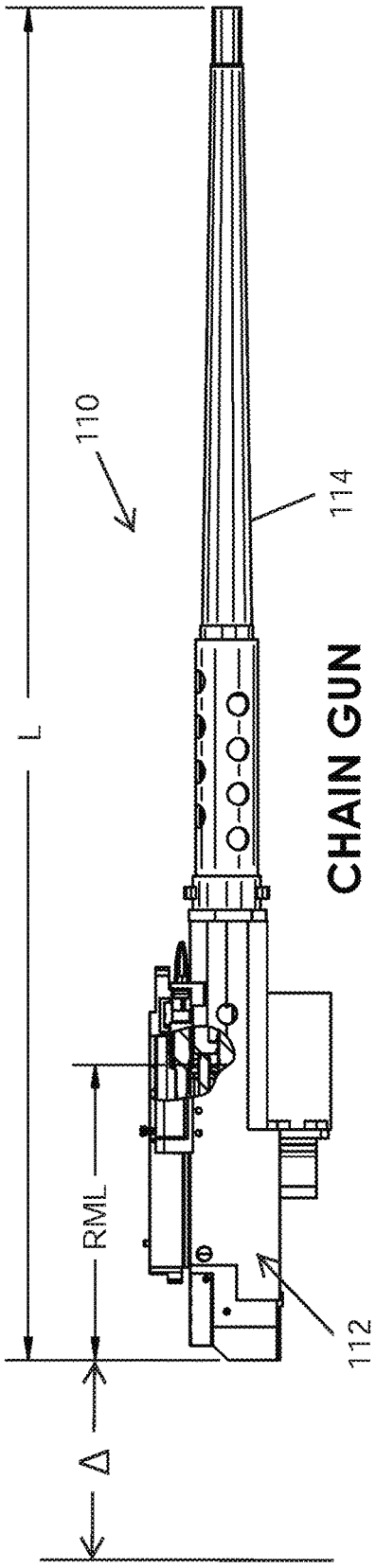

CHAIN GUN
Fig. 2C

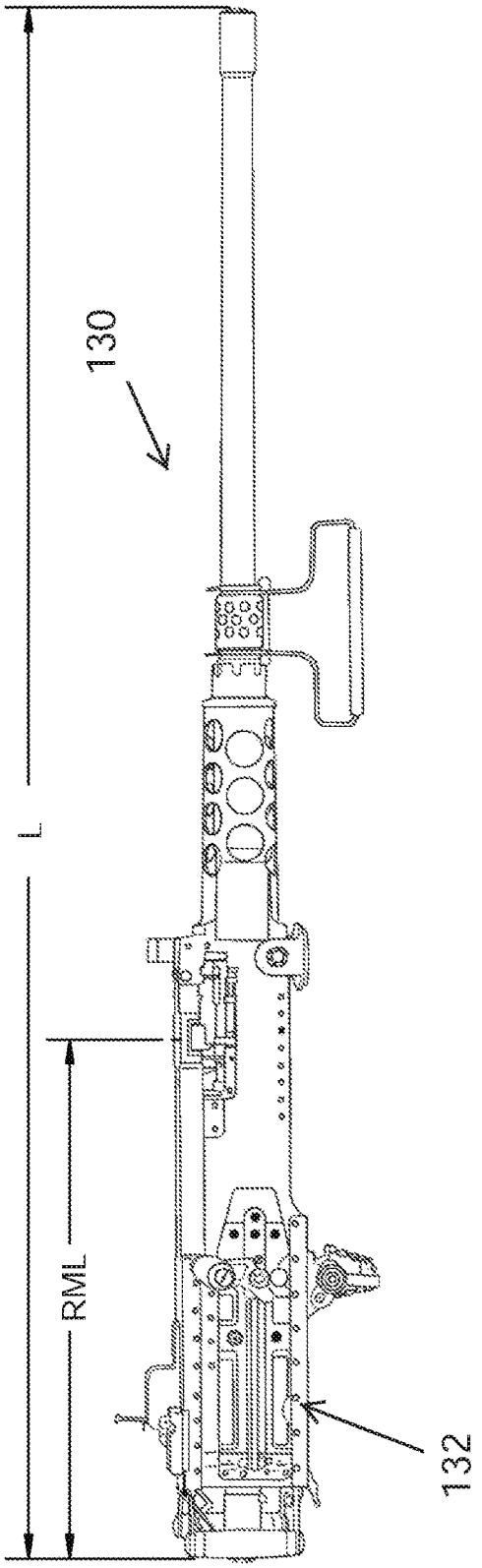

BROWNING M2
Fig. 2D (PRIOR ART)

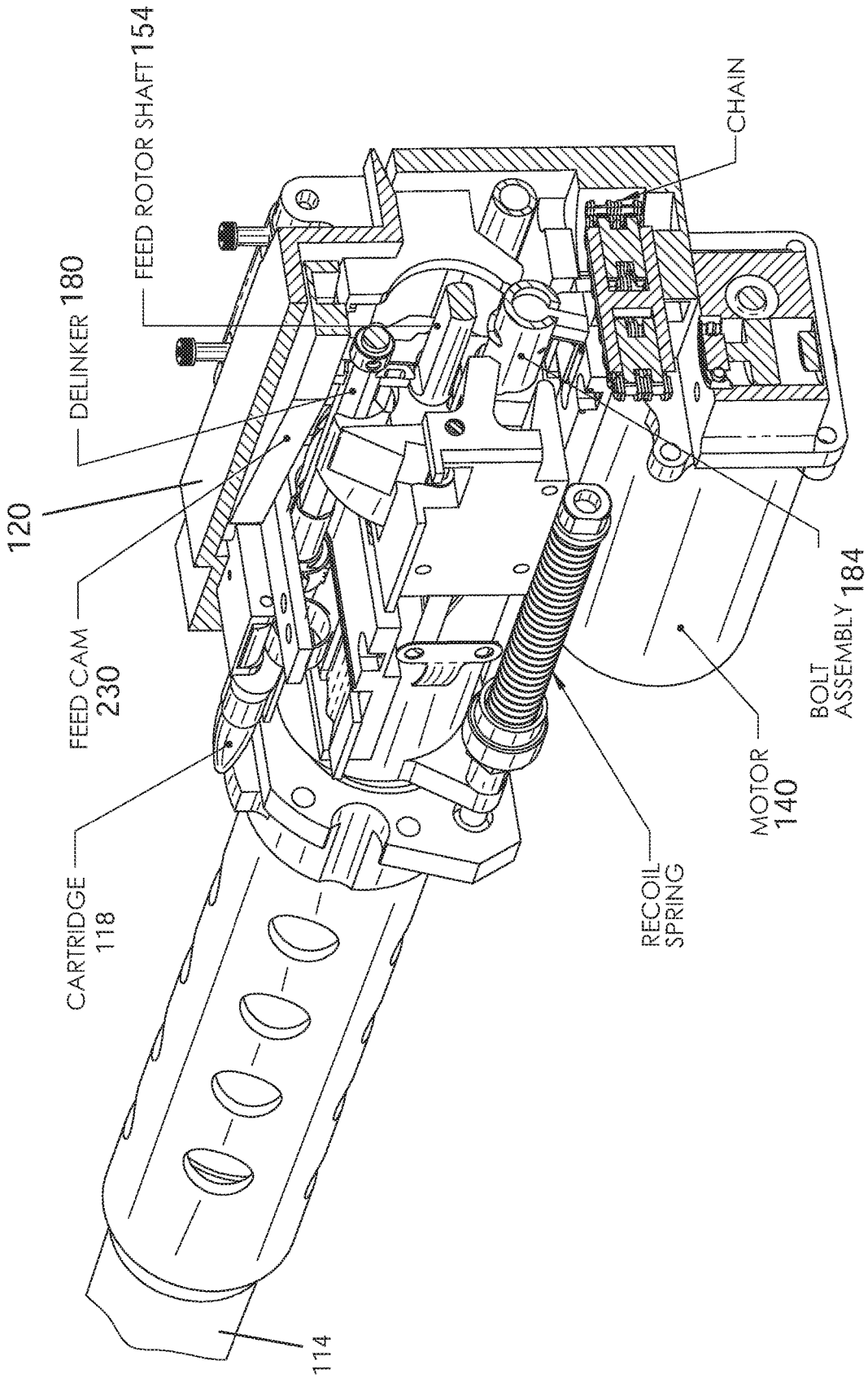
FEED ROTOR SHAFT 154
CHAIN
DELINKER 180
120
FEED CAM 230
BOLT ASSEMBLY 184
MOTOR 140
CARTRIDGE 118
RECOIL SPRING
114

Fig. 2E

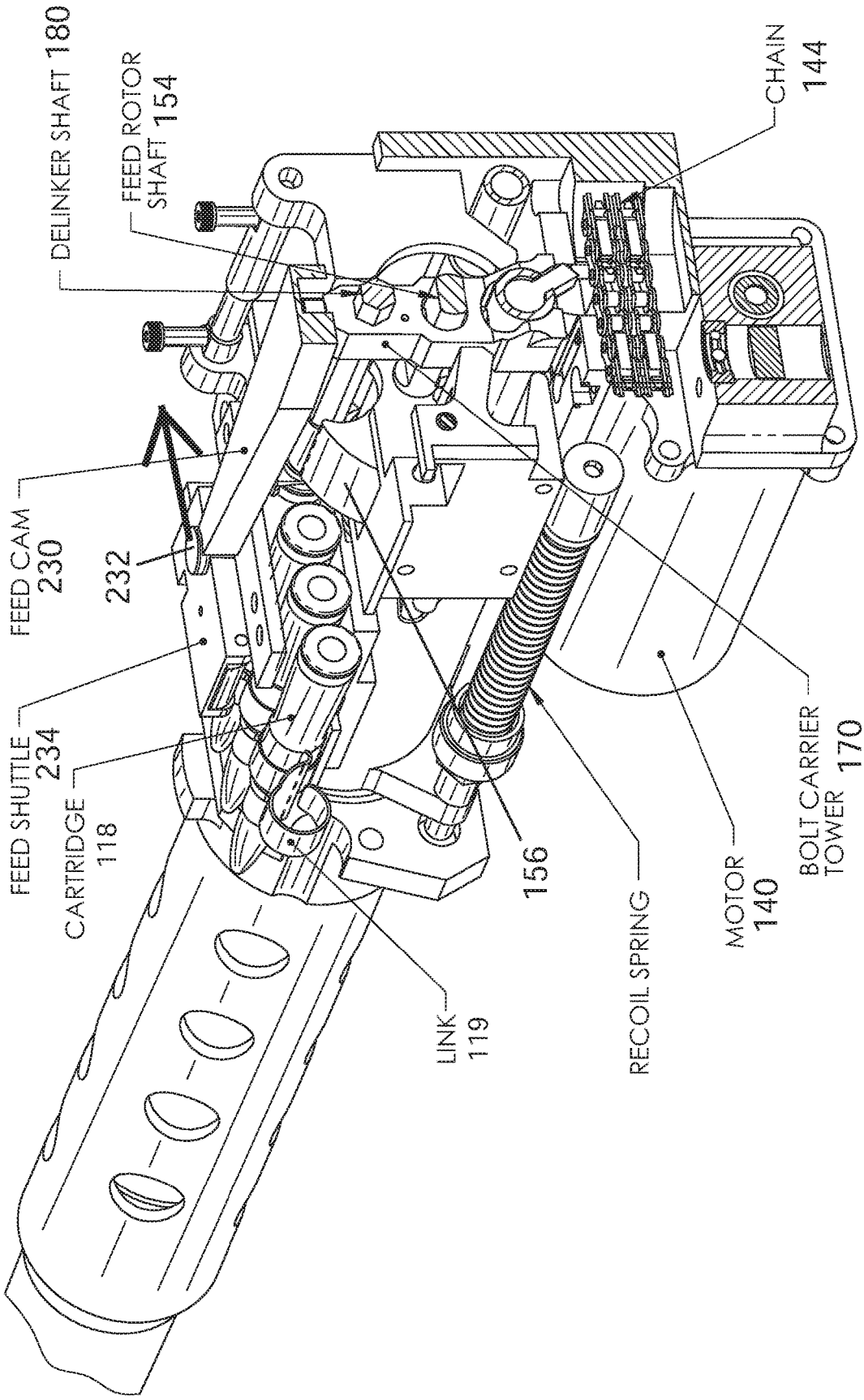
DELINKER SHAFT 180
FEED ROTOR SHAFT 154
CHAIN 144
FEED CAM 230
232
FEED SHUTTLE 234
CARTRIDGE 118
156
LINK 119
RECOIL SPRING
MOTOR 140
BOLT CARRIER TOWER 170

Fig. 2F

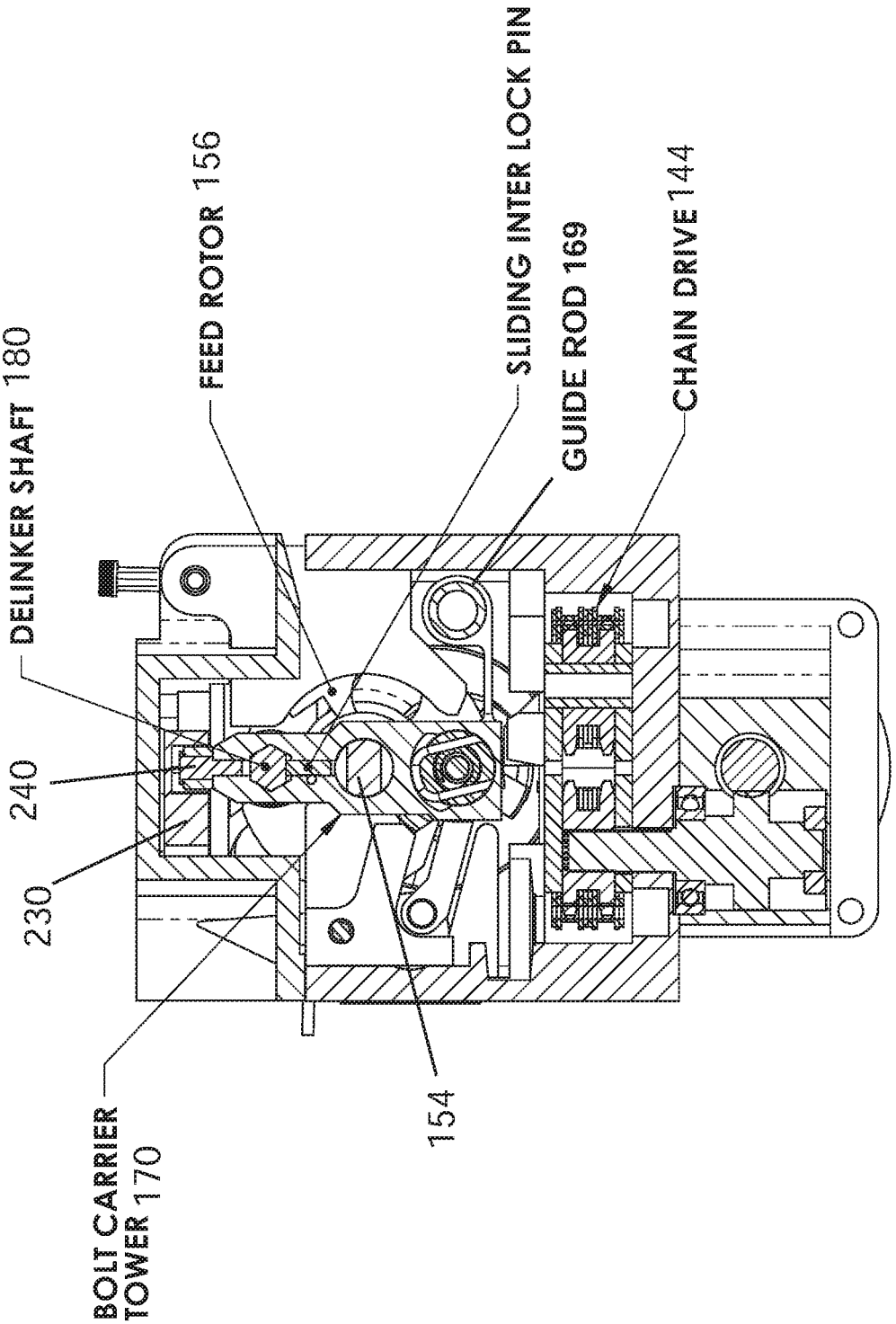
DELINKER SHAFT 180
FEED ROTOR 156
SLIDING INTER LOCK PIN
GUIDE ROD 169
CHAIN DRIVE 144
240
230
154
BOLT CARRIER TOWER 170

Fig. 2G

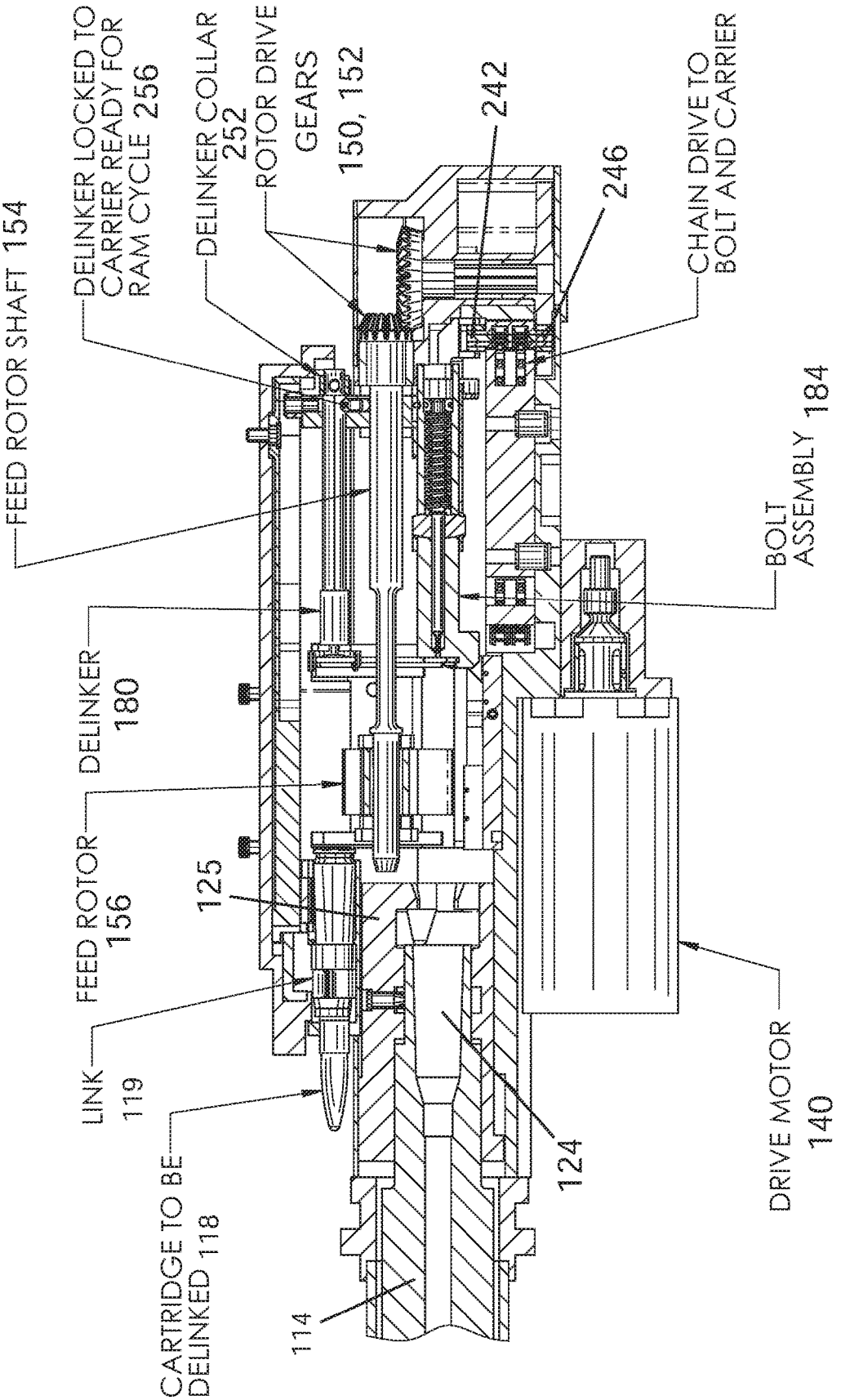
FEED ROTOR SHAFT 154
DELINKER LOCKED TO CARRIER READY FOR RAM CYCLE 256
DELINKER COLLAR 252
ROTOR DRIVE GEARS 150, 152
242
246
CHAIN DRIVE TO BOLT AND CARRIER
BOLT ASSEMBLY 184
DELINKER 180
FEED ROTOR 156
125
LINK 119
CARTRIDGE TO BE DELINKED 118
114
124
DRIVE MOTOR 140

Fig 3A

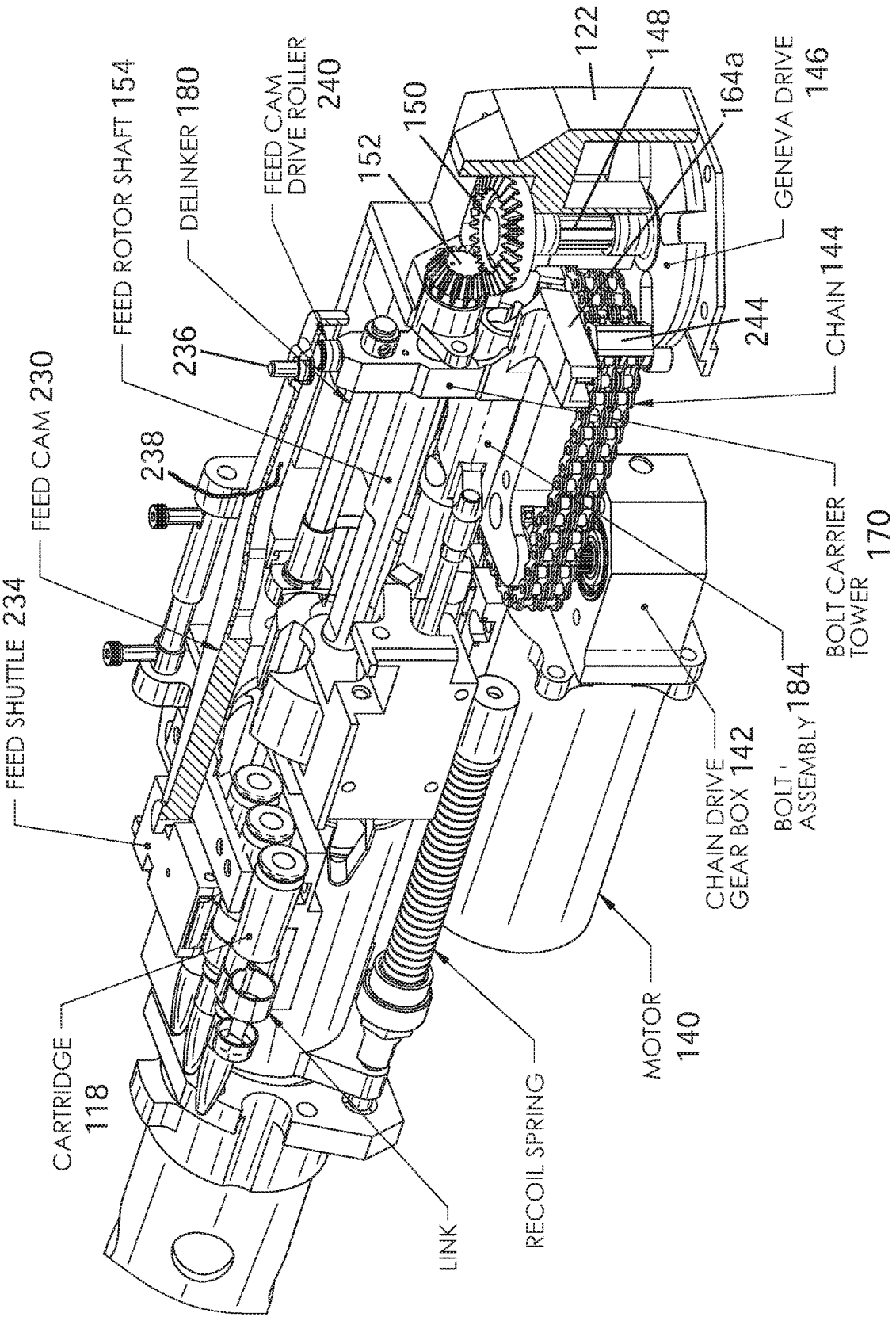
FEED SHUTTLE 234
FEED CAM 230
FEED ROTOR SHAFT 154
DELINKER 180
FEED CAM DRIVE ROLLER 240
236
238
152
150
122
148
164a
GENEVA DRIVE 146
244
CHAIN 144
BOLT CARRIER TOWER 170
BOLT ASSEMBLY 184
CHAIN DRIVE GEAR BOX 142
MOTOR 140
CARTRIDGE 118
RECOIL SPRING
LINK

Fig. 3B

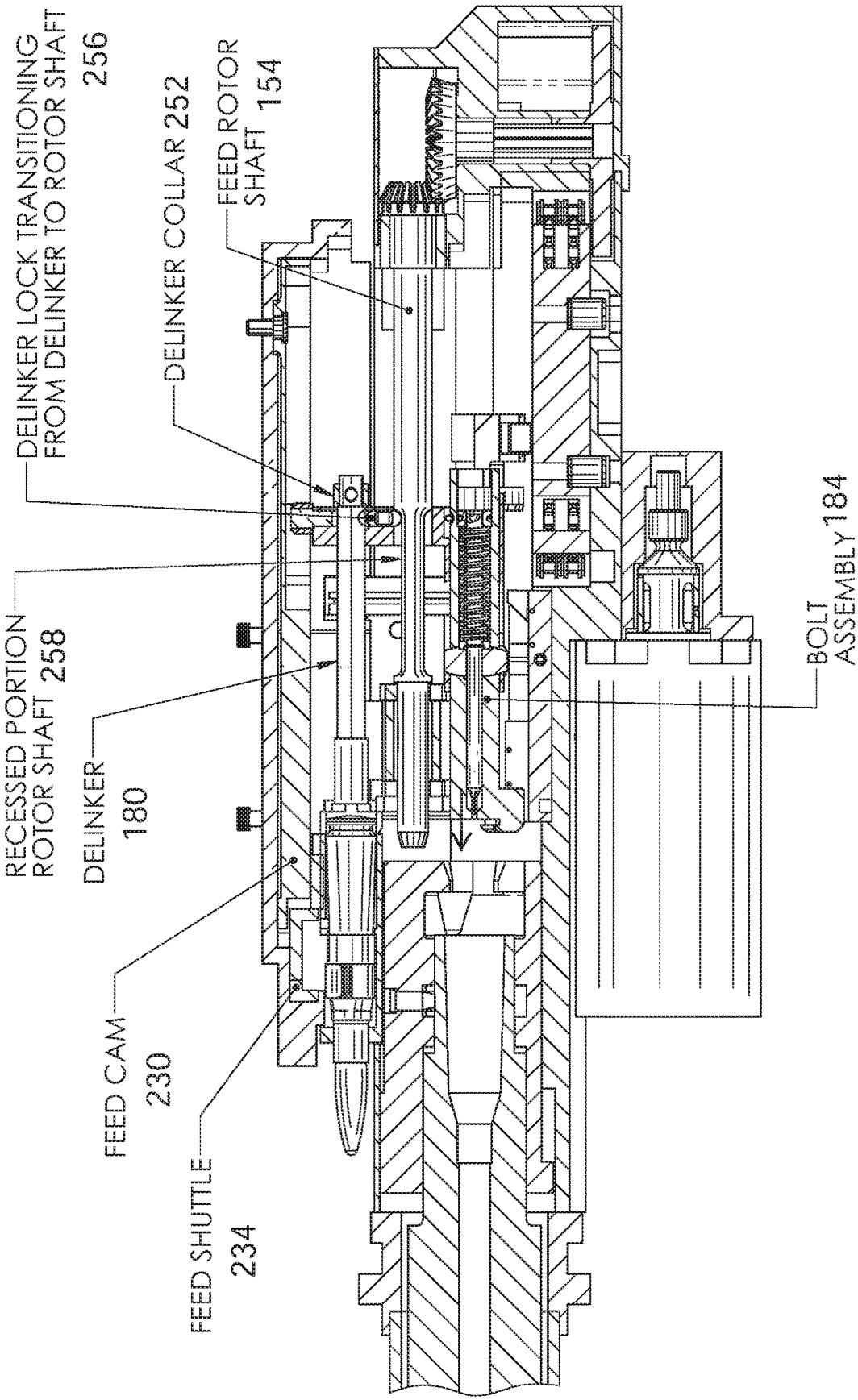
DELINKER LOCK TRANSITIONING FROM DELINKER TO ROTOR SHAFT 256
DELINKER COLLAR 252
FEED ROTOR SHAFT 154
RECESSED PORTION ROTOR SHAFT 258
DELINKER 180
FEED CAM 230
FEED SHUTTLE 234
BOLT ASSEMBLY 184

Fig. 4A

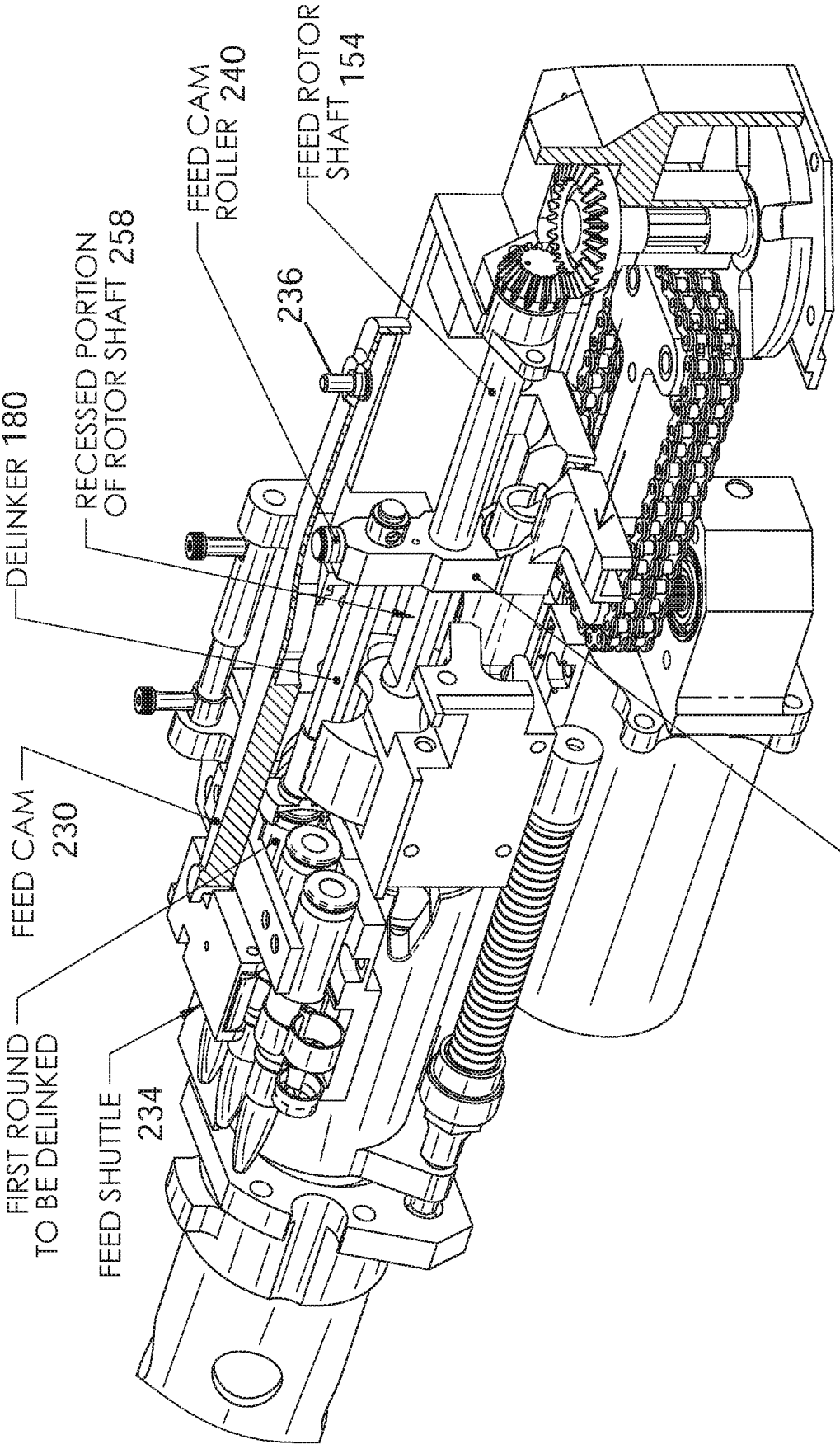
DELINKER 180
RECESSED PORTION OF ROTOR SHAFT 258
FEED CAM ROLLER 240
FEED ROTOR SHAFT 154
236
FEED CAM 230
FIRST ROUND TO BE DELINKED
FEED SHUTTLE 234
BOLT CARRIER TOWER 170

Fig. 4B

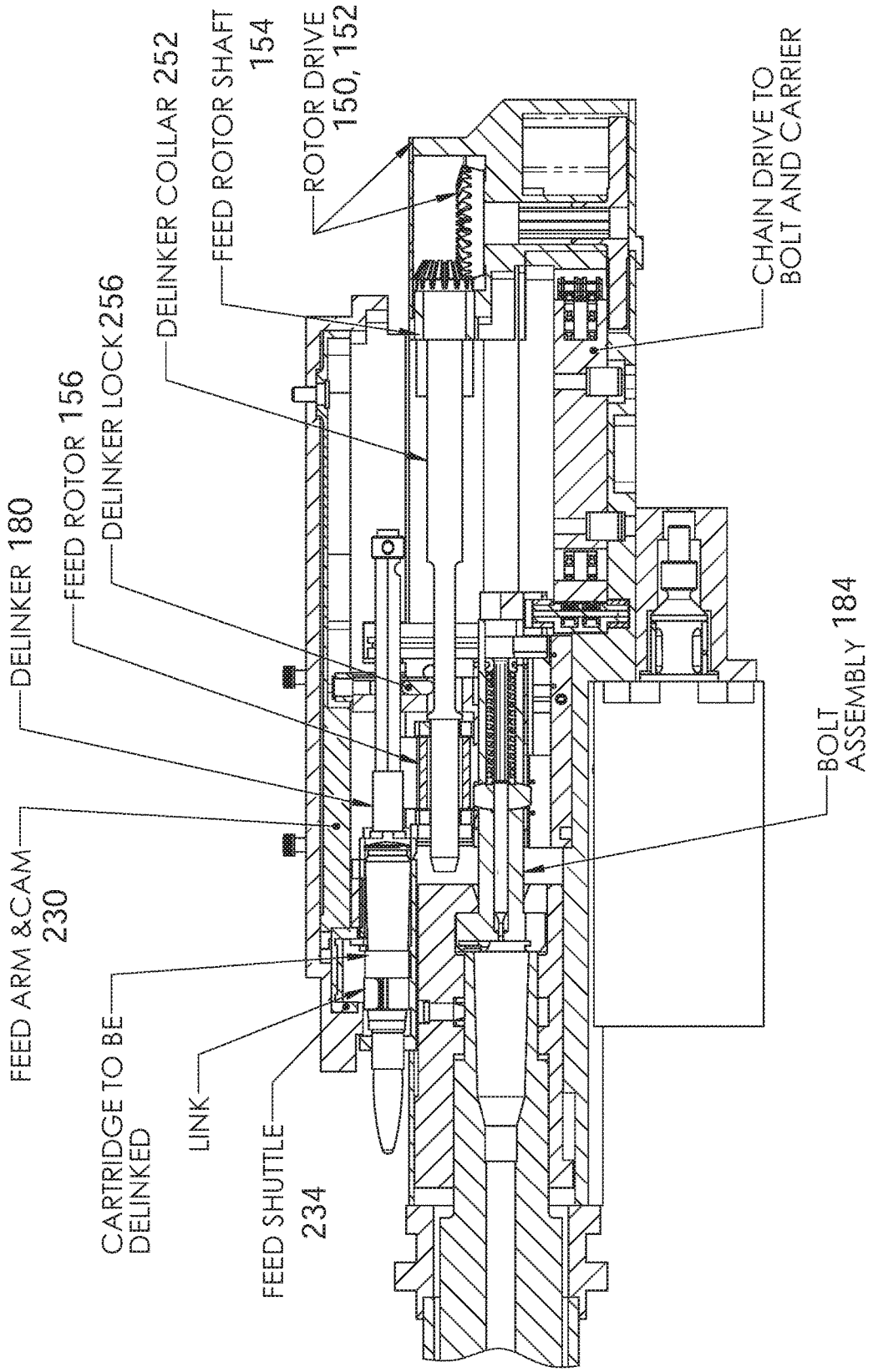
DELINKER 180
FEED ROTOR 156
DELINKER LOCK 256
DELINKER COLLAR 252
FEED ROTOR SHAFT 154
ROTOR DRIVE 150, 152
CHAIN DRIVE TO BOLT AND CARRIER
FEED ARM &CAM 230
CARTRIDGE TO BE DELINKED
LINK
FEED SHUTTLE 234
BOLT ASSEMBLY 184

Fig. 5A

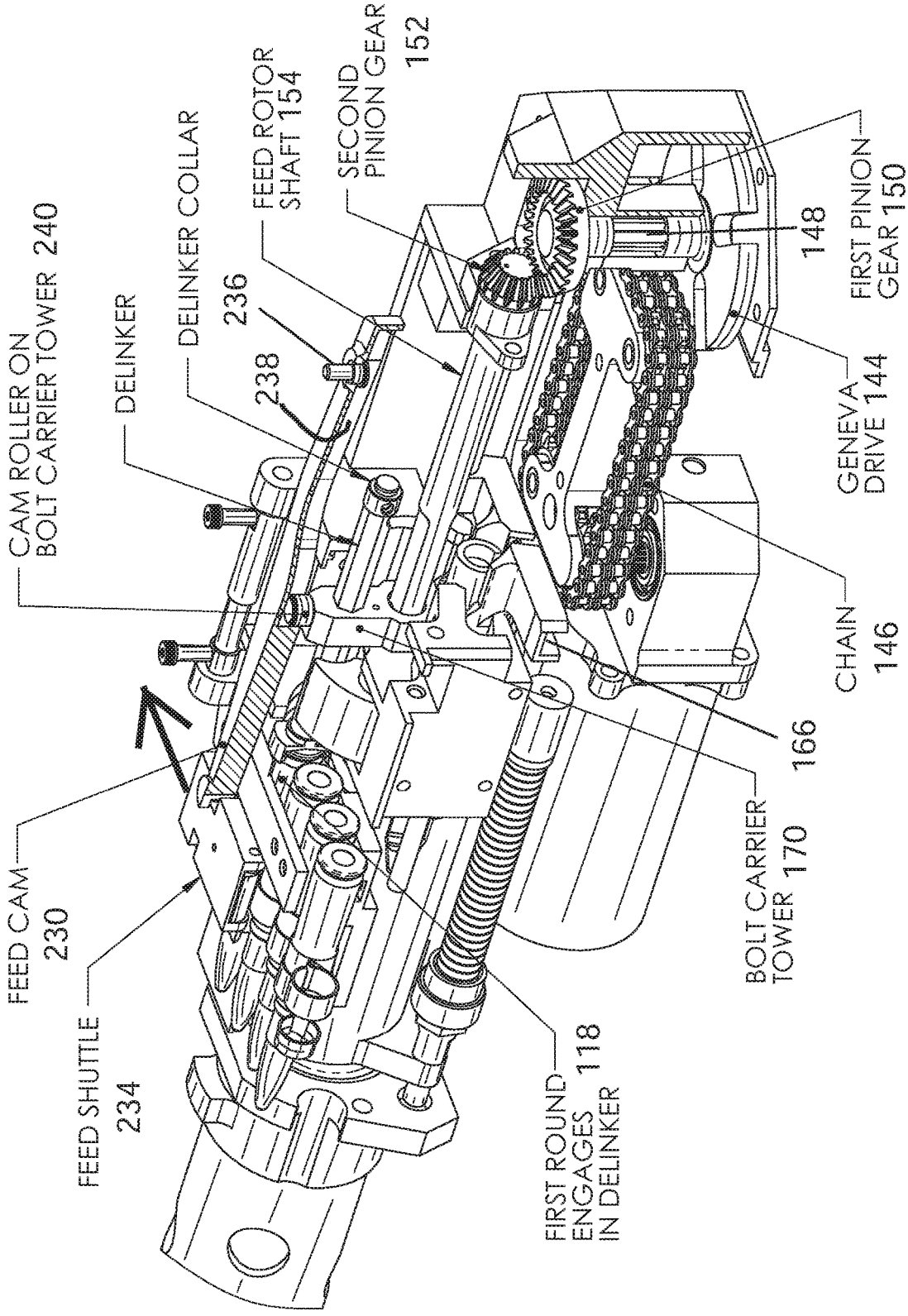
CAM ROLLER ON BOLT CARRIER TOWER 240
DELINKER
DELINKER COLLAR
236
238
FEED ROTOR SHAFT 154
SECOND PINION GEAR 152
148
FIRST PINION GEAR 150
GENEVA DRIVE 144
CHAIN 146
166
BOLT CARRIER TOWER 170
FEED CAM 230
FEED SHUTTLE 234
FIRST ROUND ENGAGES IN DELINKER 118

Fig. 5B

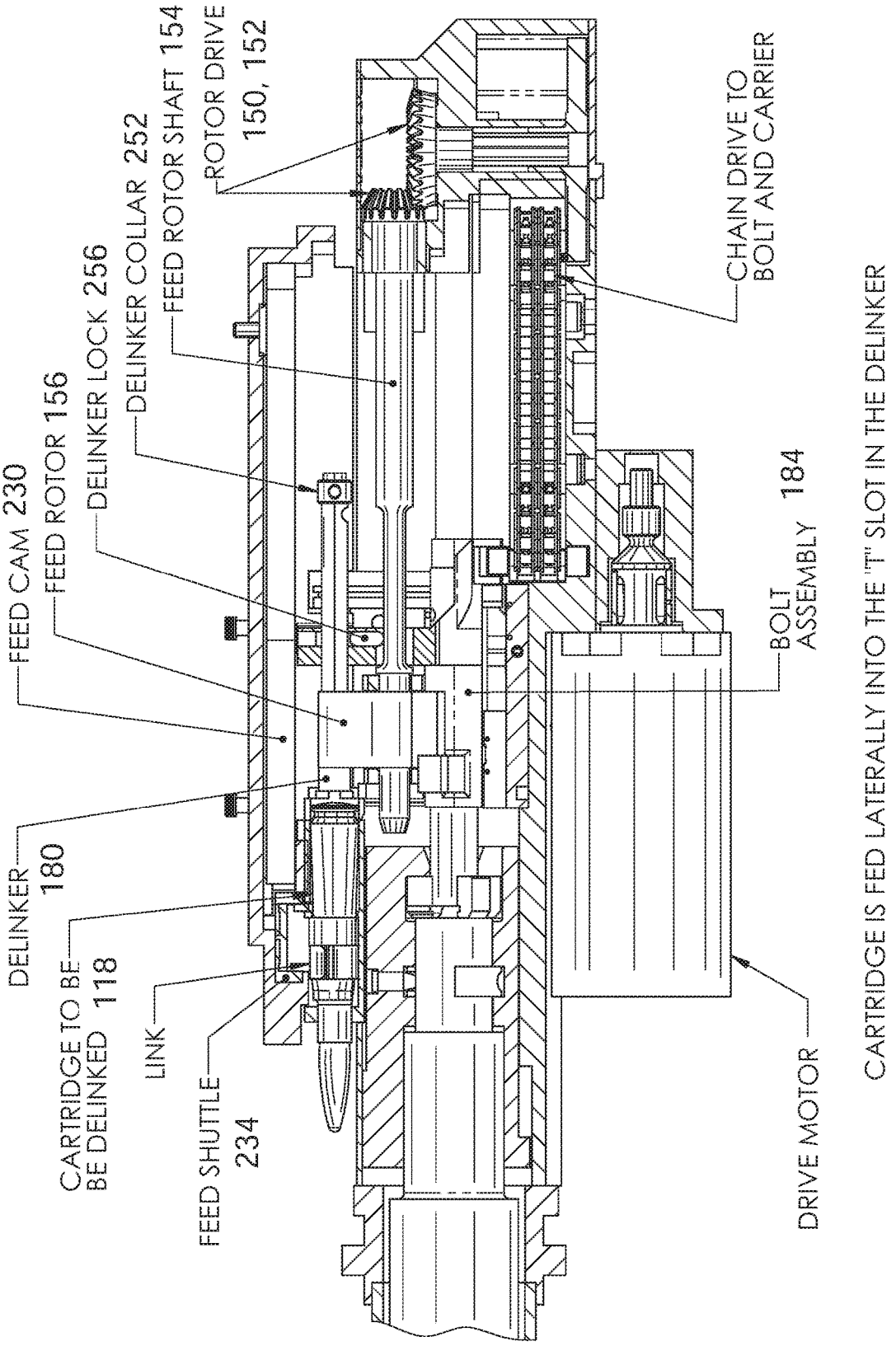
FEED CAM 230
FEED ROTOR 156
DELINKER LOCK 256
DELINKER COLLAR 252
FEED ROTOR SHAFT 154
ROTOR DRIVE 150, 152
CHAIN DRIVE TO BOLT AND CARRIER
BOLT ASSEMBLY 184
DELINKER 180
CARTRIDGE TO BE DELINKED 118
LINK
FEED SHUTTLE 234
DRIVE MOTOR
CARTRIDGE IS FED LATERALLY INTO THE "T" SLOT IN THE DELINKER

Fig. 6A

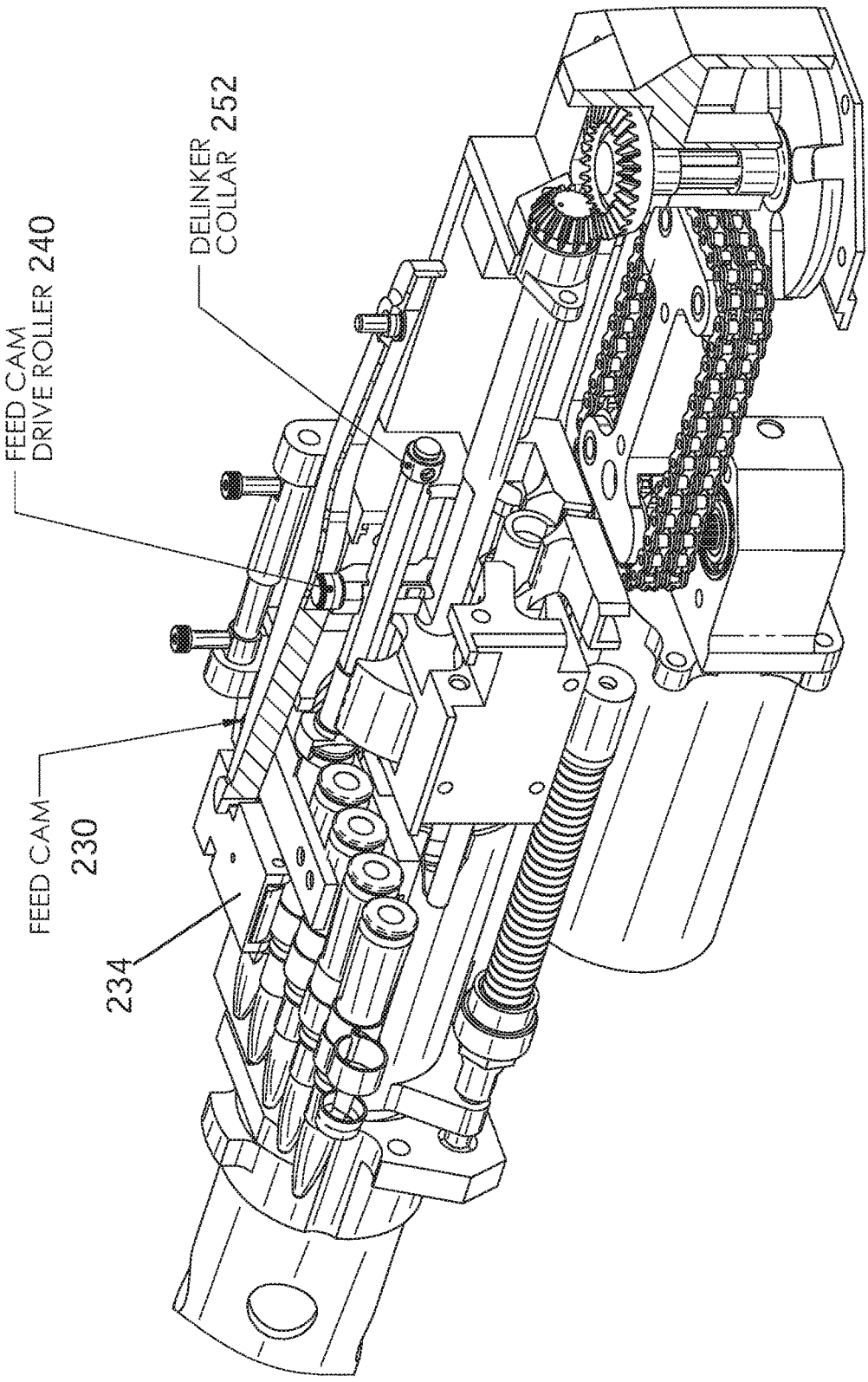
DELINKER COLLAR 252
FEED CAM DRIVE ROLLER 240
FEED CAM 230
234

Fig. 6B

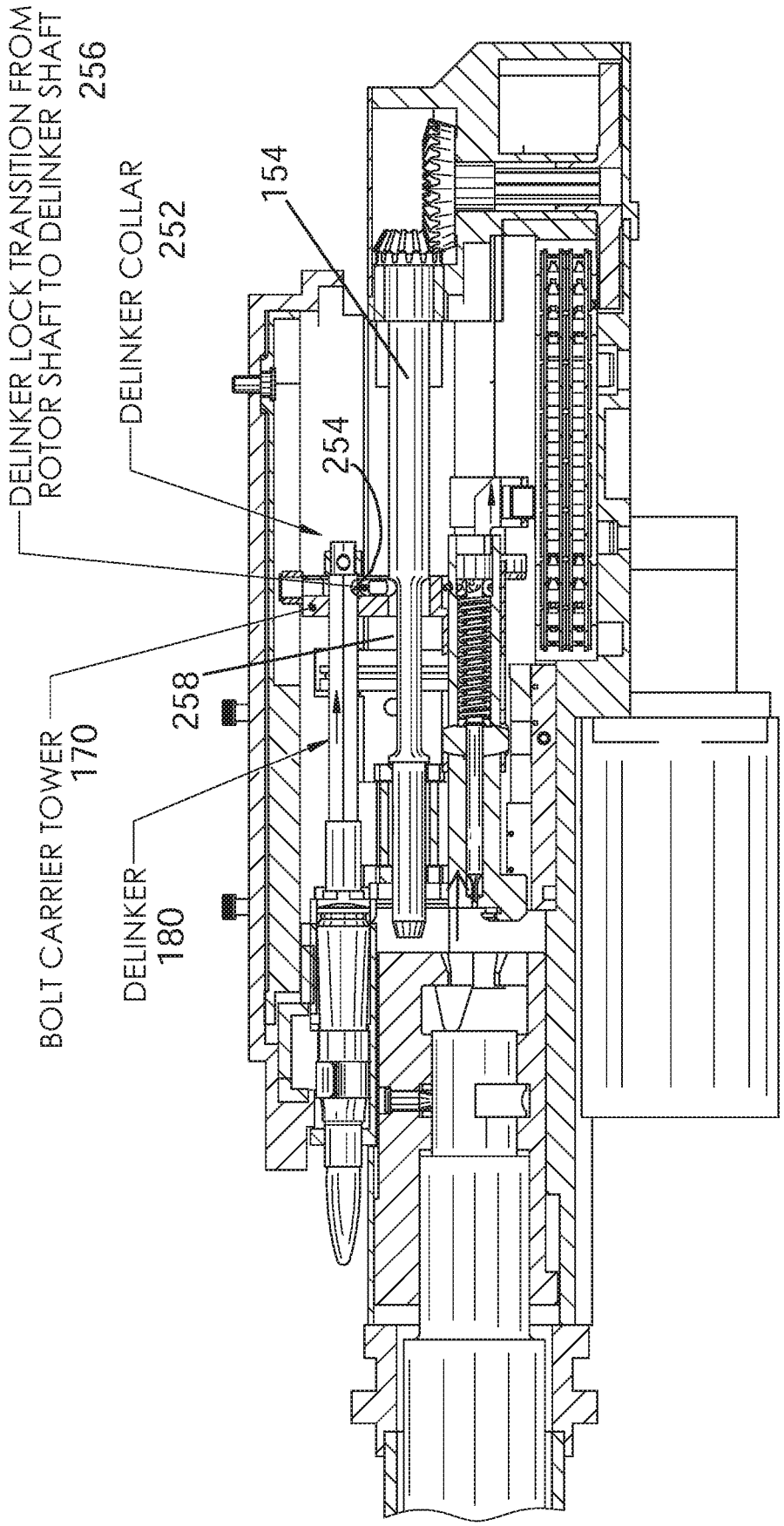
DELINKER LOCK TRANSITION FROM ROTOR SHAFT TO DELINKER SHAFT 256
DELINKER COLLAR 252
154
254
258
BOLT CARRIER TOWER 170
DELINKER 180
BOLT AND CARRIER MOVE FREELY TO REAR UNLOCKING BOLT AND DELINKER COLLAR IS PICKED UP BY CARRIER TOWER

Fig. 7A

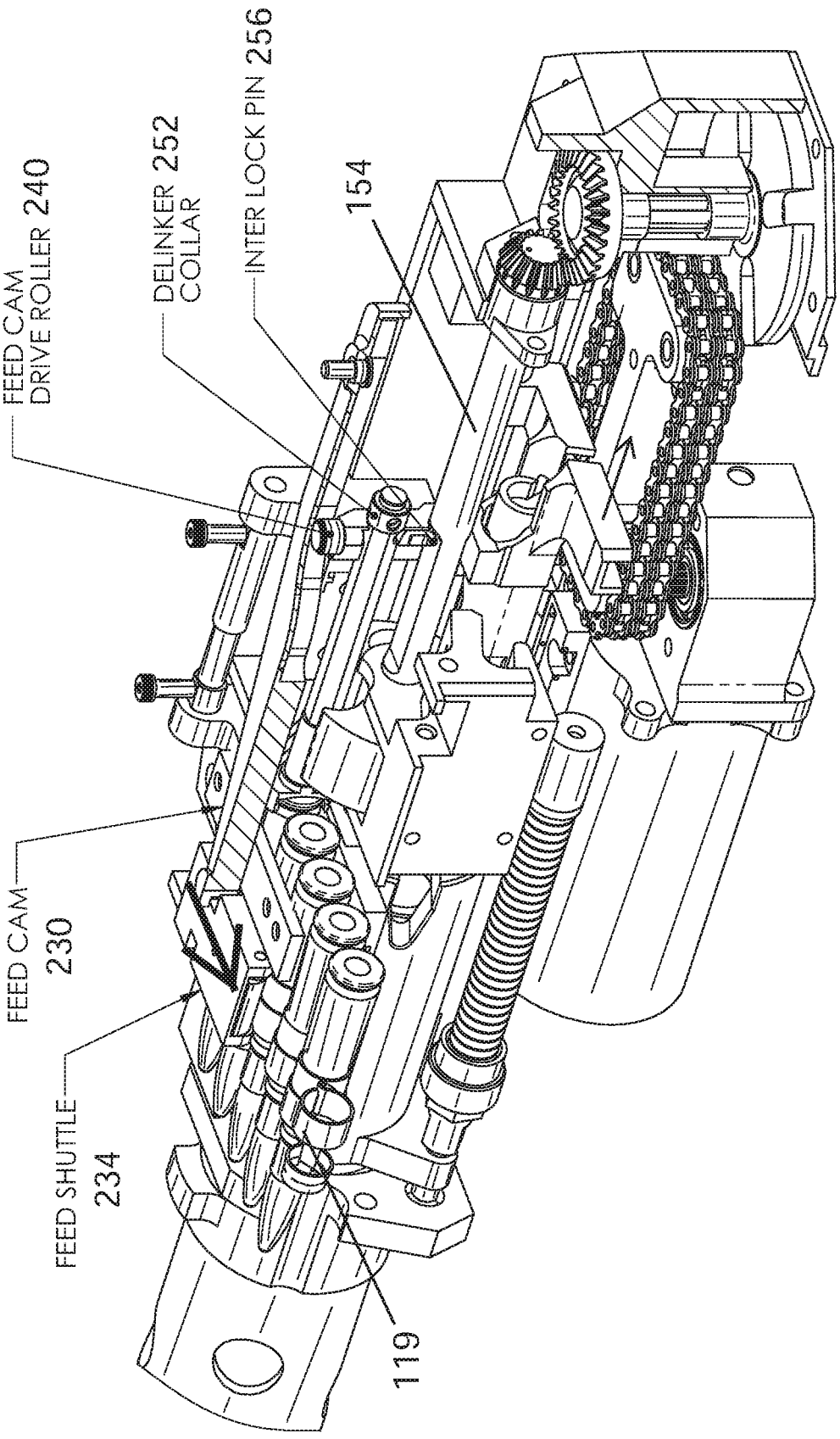
FEED CAM DRIVE ROLLER 240
DELINKER 252 COLLAR
INTER LOCK PIN 256
154
FEED CAM 230
FEED SHUTTLE 234
119

Fig. 7B

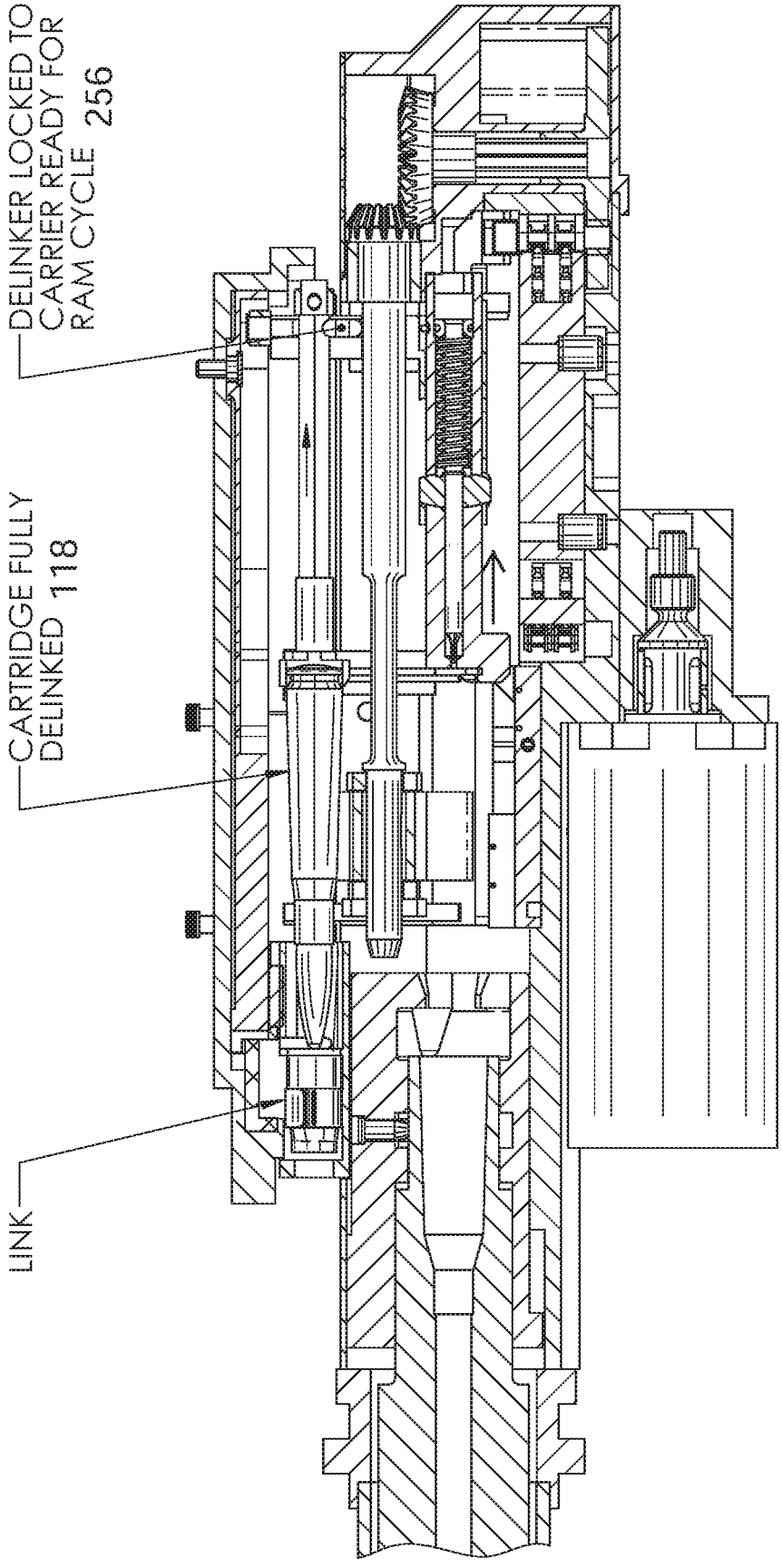
DELINKER LOCKED TO CARRIER READY FOR RAM CYCLE 256
CARTRIDGE FULLY DELINKED 118
LINK

Fig. 8A

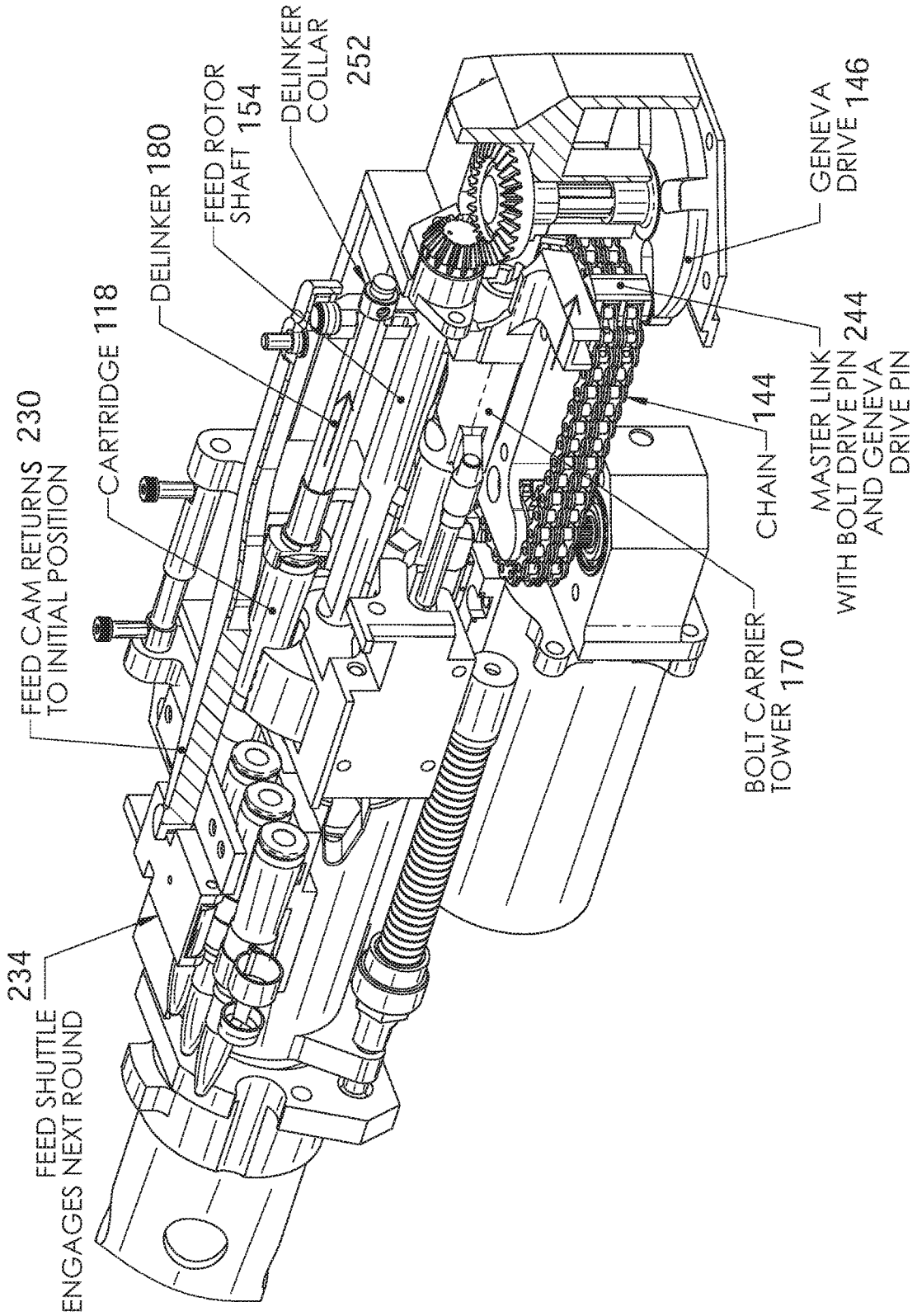
234
FEED SHUTTLE ENGAGES NEXT ROUND
FEED CAM RETURNS TO INITIAL POSITION 230
CARTRIDGE 118
DELINKER 180
FEED ROTOR SHAFT 154
DELINKER COLLAR 252
BOLT CARRIER TOWER 170
CHAIN 144
MASTER LINK WITH BOLT DRIVE PIN AND GENEVA DRIVE PIN 244
GENEVA DRIVE 146

Fig. 8B

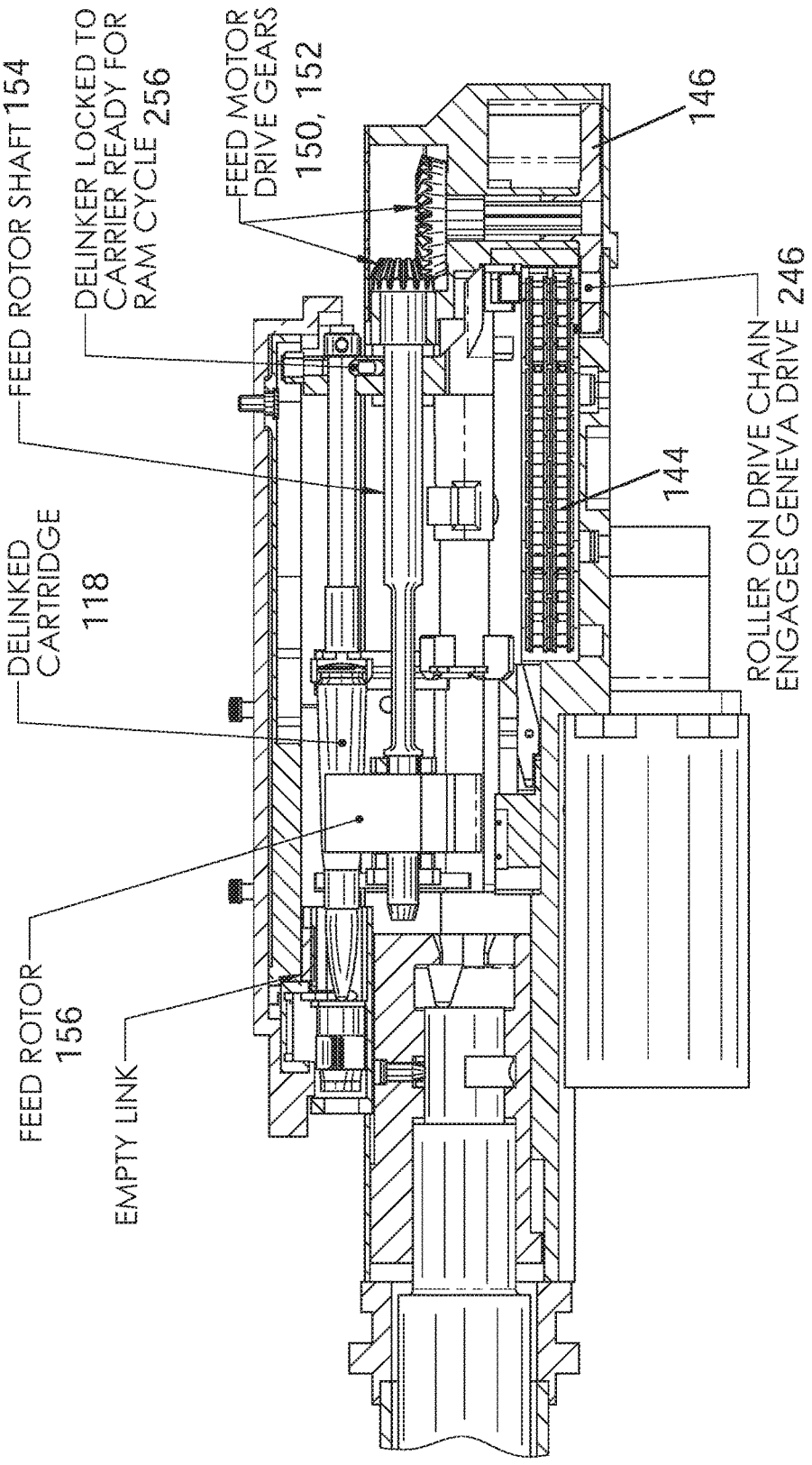
FEED ROTOR SHAFT 154
DELINKER LOCKED TO CARRIER READY FOR RAM CYCLE 256
FEED MOTOR DRIVE GEARS 150, 152
146
DELINKED CARTRIDGE 118
144
ROLLER ON DRIVE CHAIN ENGAGES GENEVA DRIVE 246
FEED ROTOR 156
EMPTY LINK
AT THIS TIME THE DELINKER ROUND IS ROTATED BY THE ROTOR AND GENEVA DRIVE TO THE BOLT FACE TO BE CHAMBERED AND FIRED

Fig. 9

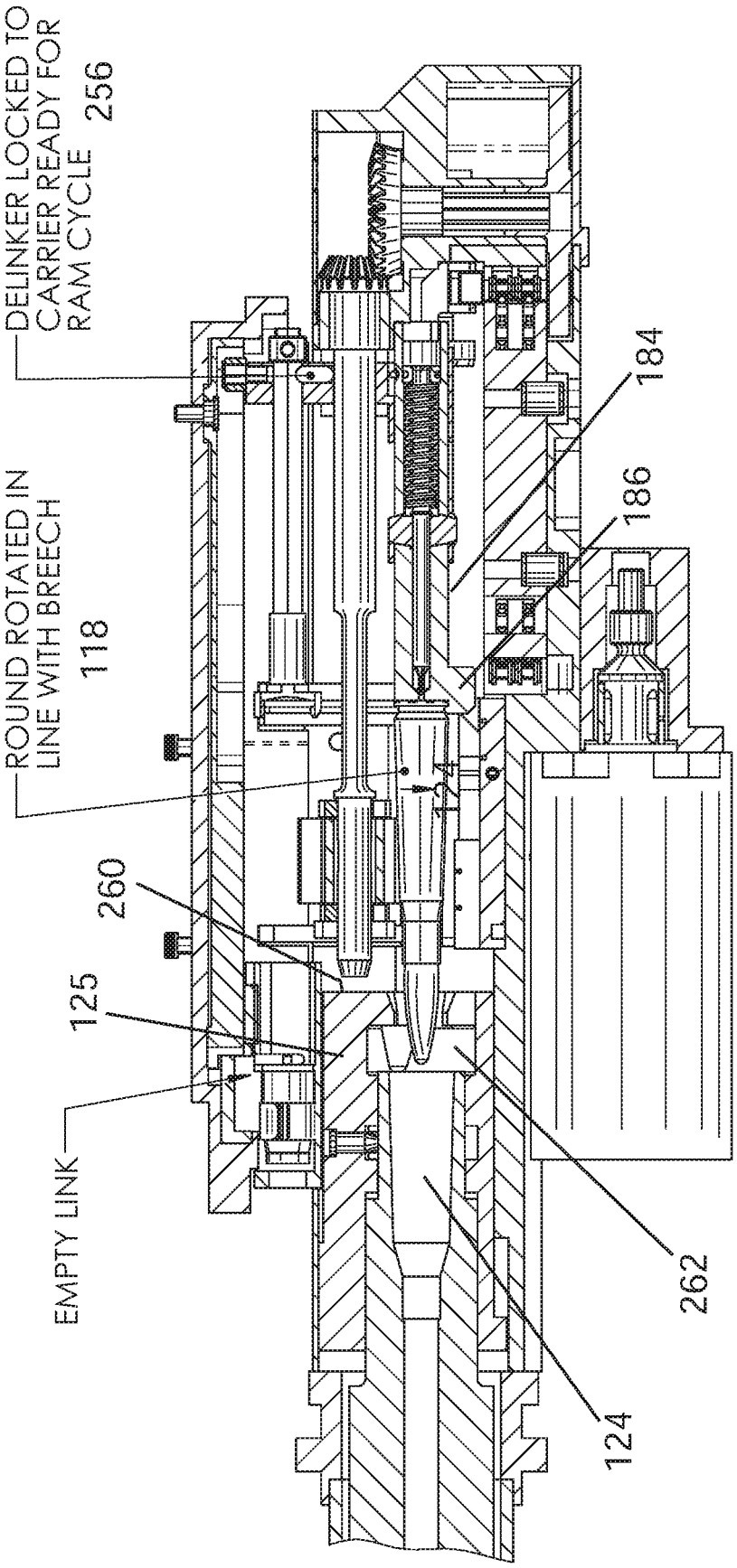
DELINKER LOCKED TO CARRIER READY FOR RAM CYCLE 256
ROUND ROTATED IN LINE WITH BREECH 118
184
186
260
125
EMPTY LINK
262
124

Fig. 10A

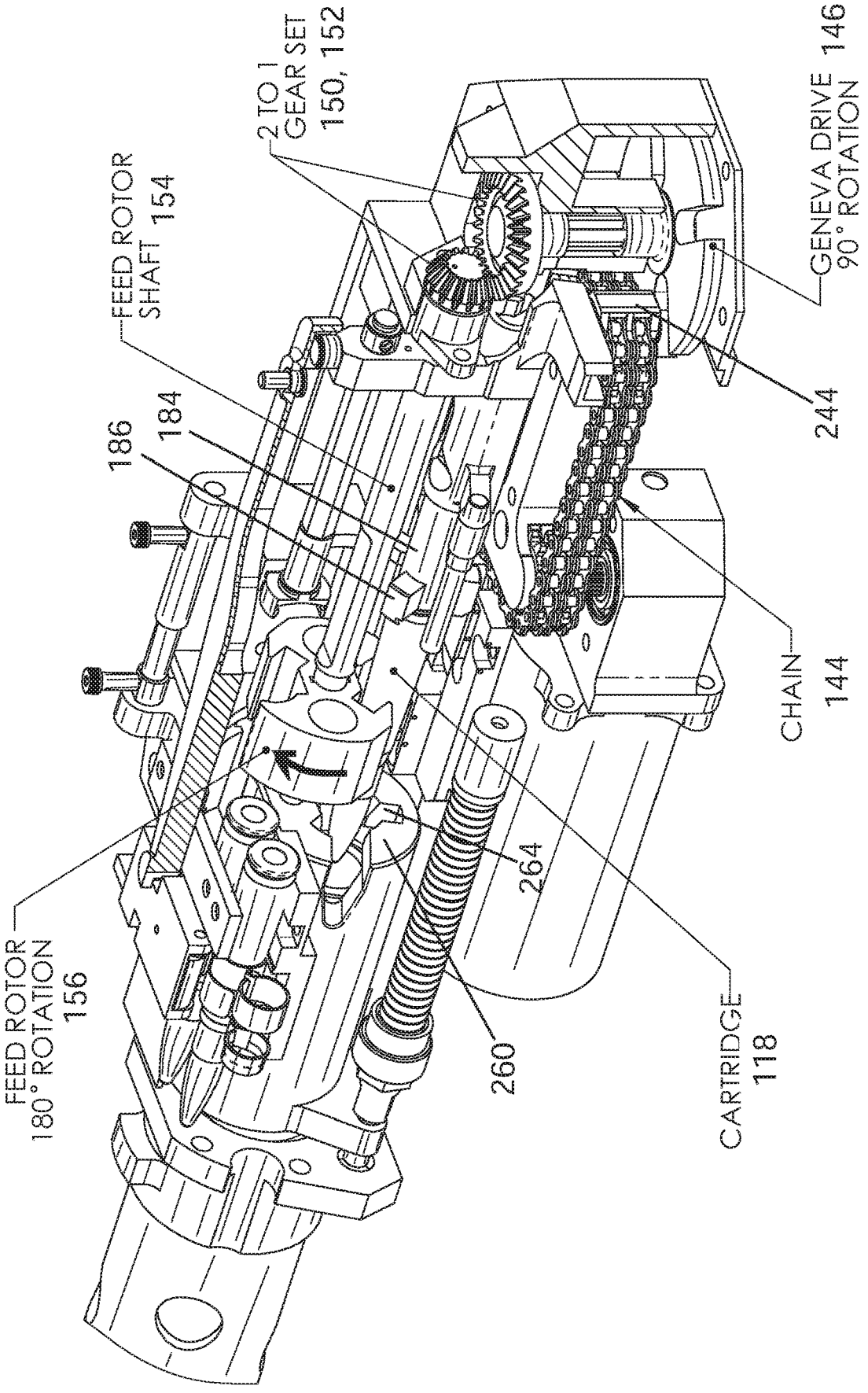
2 TO 1
GEAR SET
150, 152
GENEVA DRIVE
90° ROTATION
146
FEED ROTOR
SHAFT 154
186
184
244
CHAIN
144
264
FEED ROTOR
180° ROTATION
156
260
CARTRIDGE
118

Fig. 10B

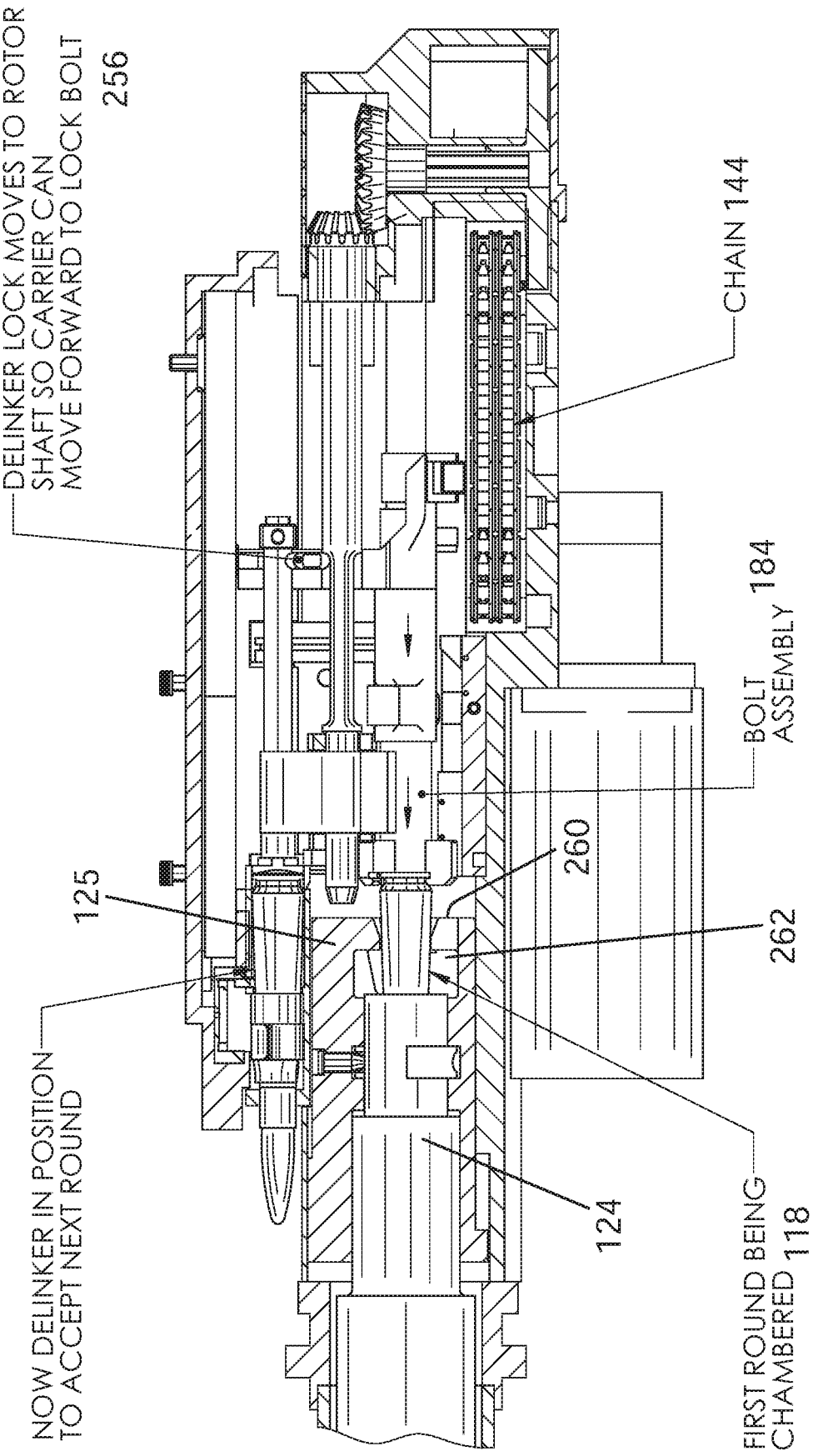
DELINKER LOCK MOVES TO ROTOR SHAFT SO CARRIER CAN MOVE FORWARD TO LOCK BOLT
256
CHAIN 144
BOLT ASSEMBLY 184
260
262
125
NOW DELINKER IN POSITION TO ACCEPT NEXT ROUND
124
FIRST ROUND BEING CHAMBERED 118

Fig. 11

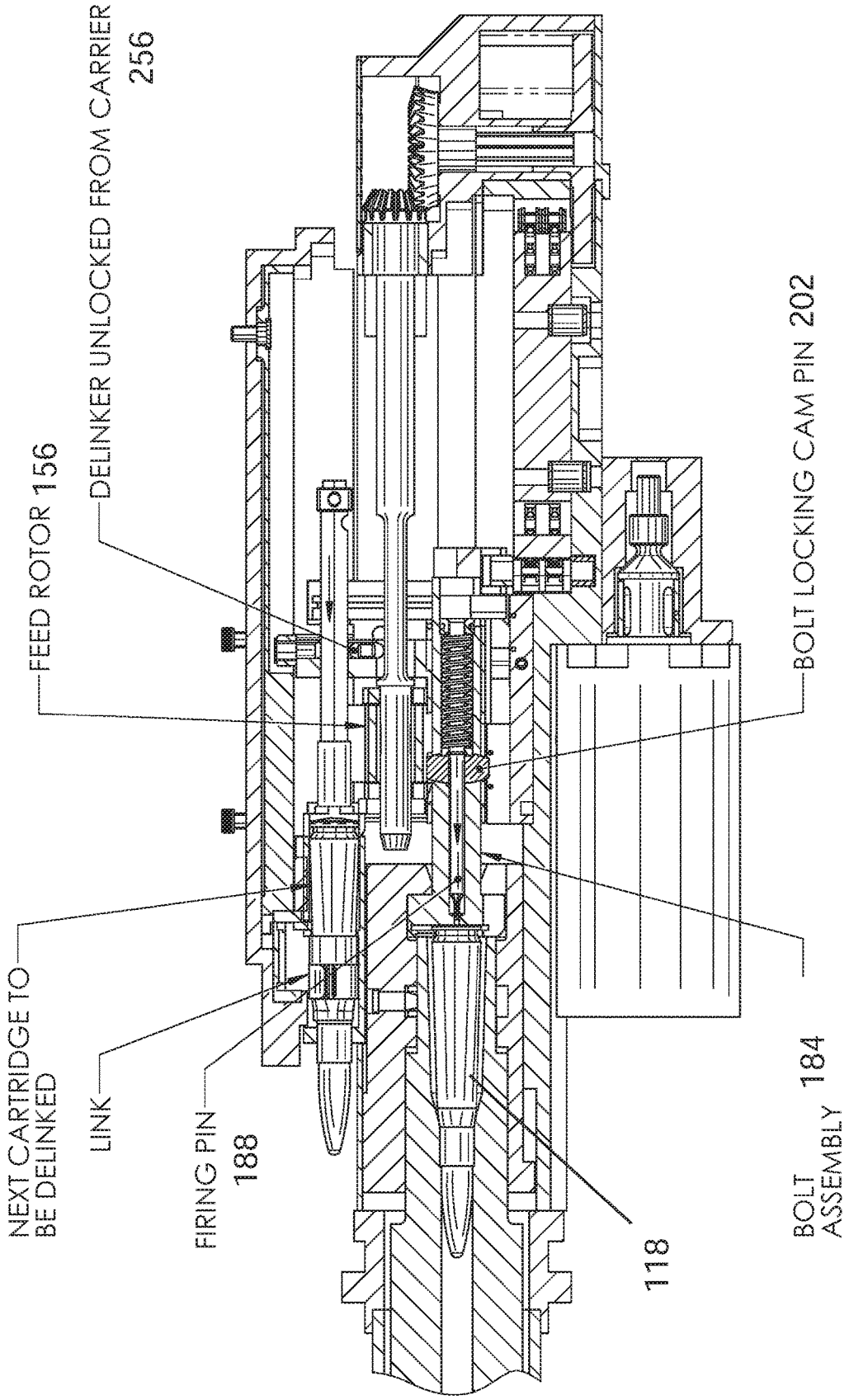
FEED ROTOR 156
DELINKER UNLOCKED FROM CARRIER 256
BOLT LOCKING CAM PIN 202
NEXT CARTRIDGE TO BE DELINKED
LINK
FIRING PIN 188
118
BOLT ASSEMBLY 184

Fig. 12A

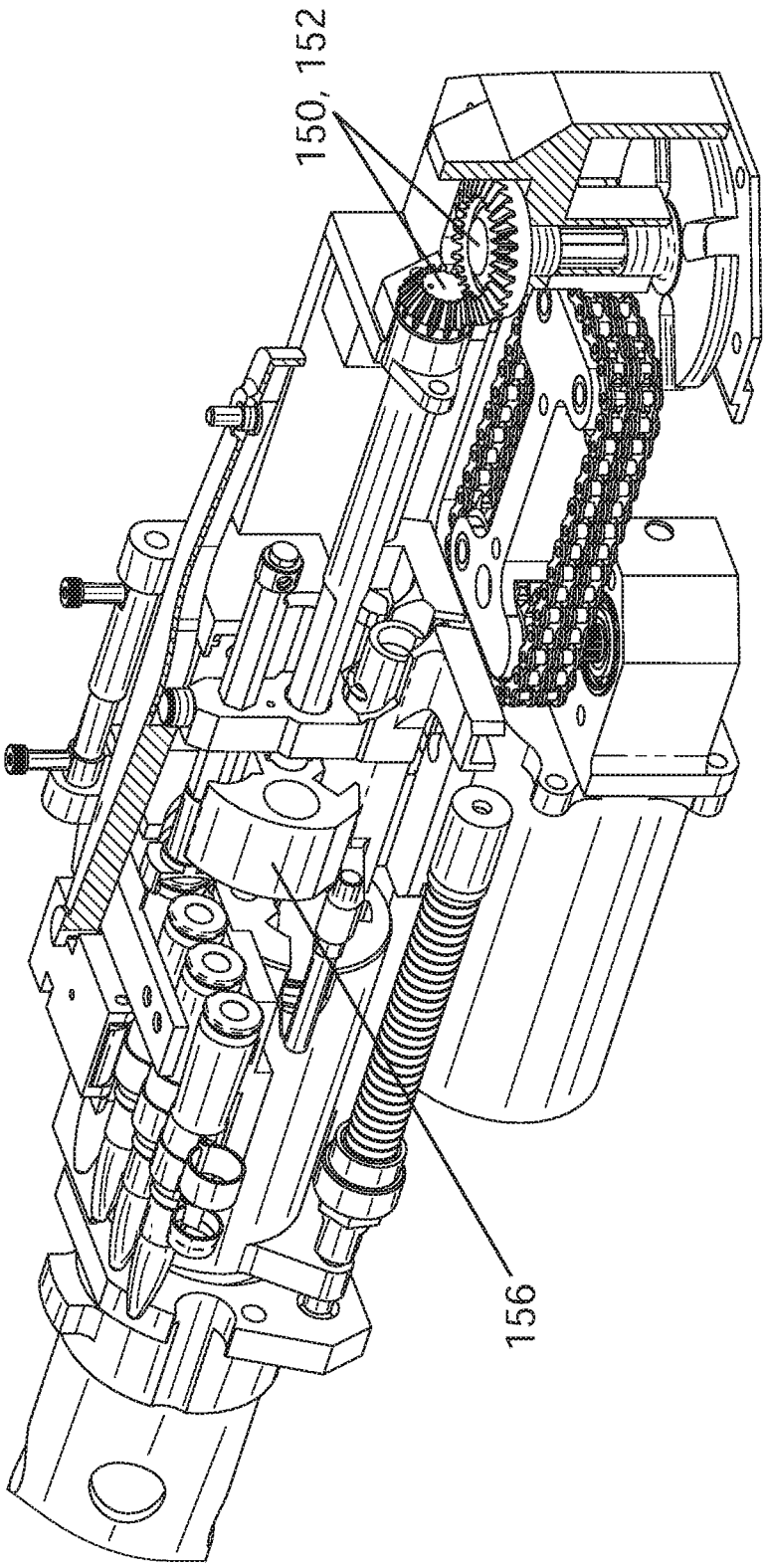

Fig. 12B

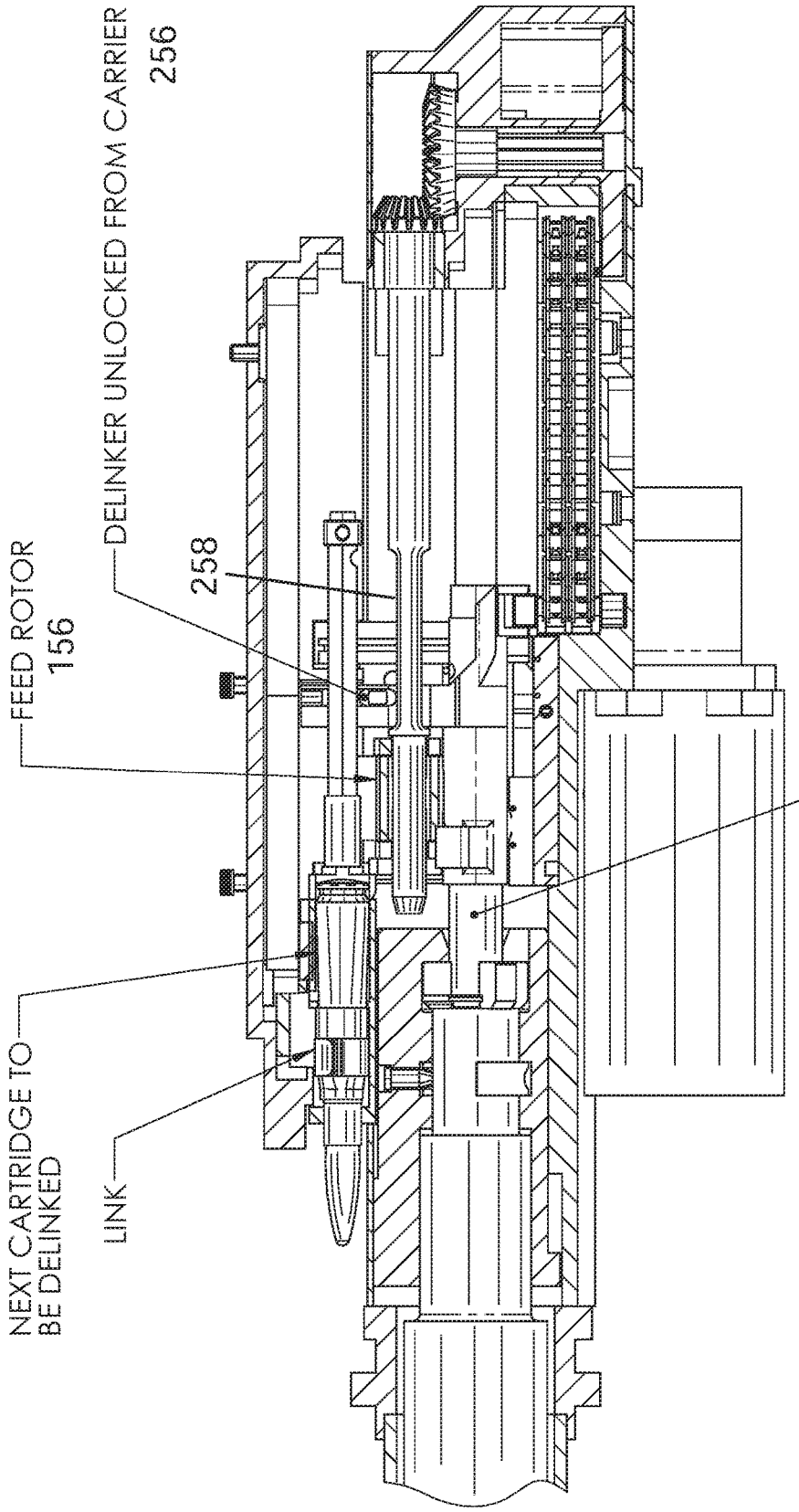
DELINKER UNLOCKED FROM CARRIER
256
258
FEED ROTOR
156
NEXT CARTRIDGE TO
BE DELINKED
LINK
BOLT
ASSEMBLY 184
FIRST ROUND BEING FIRED AND SECOND CARTRIDGE
FED LATERALLY INTO DELINKER

Fig. 13

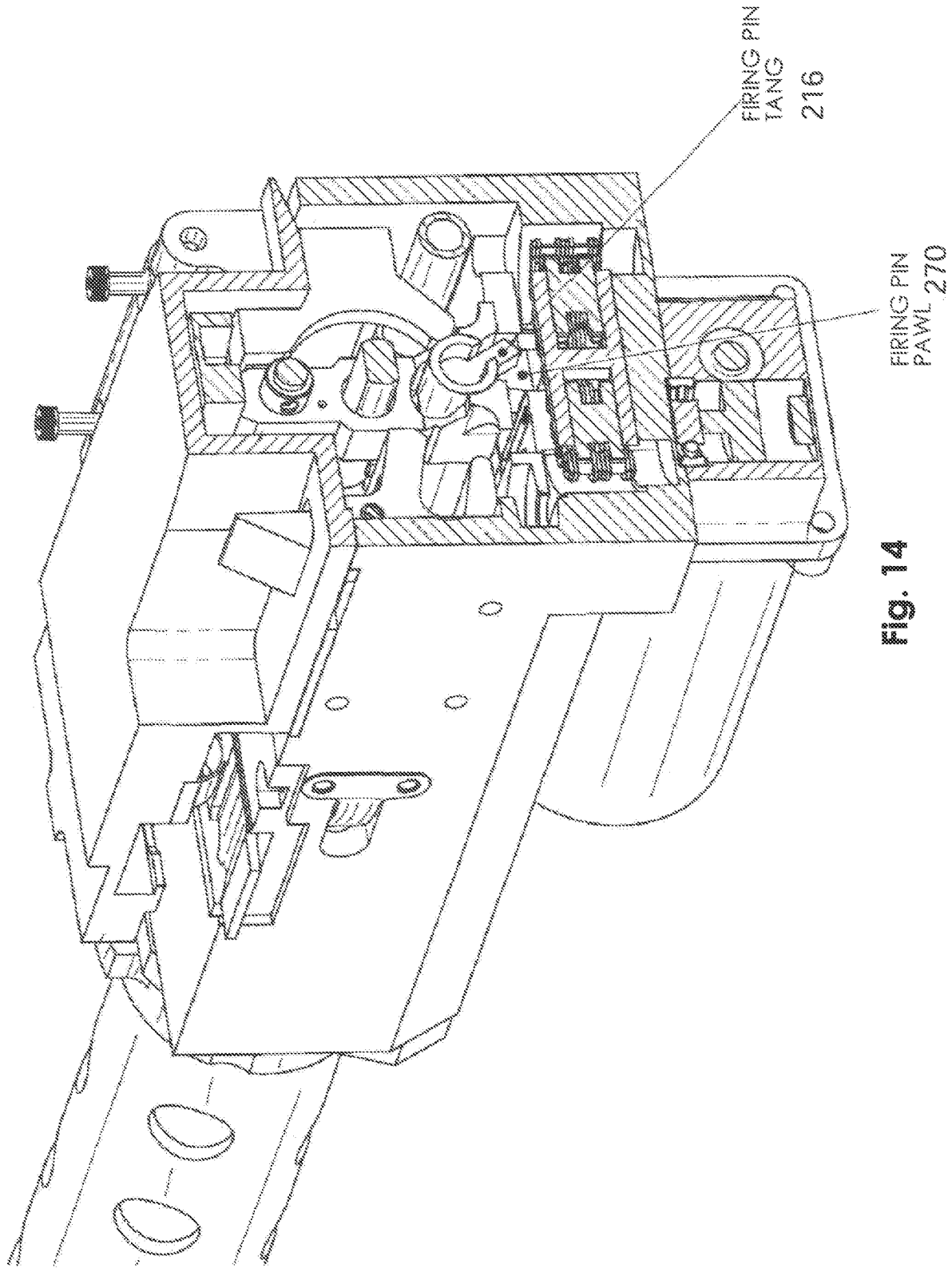

Fig. 14

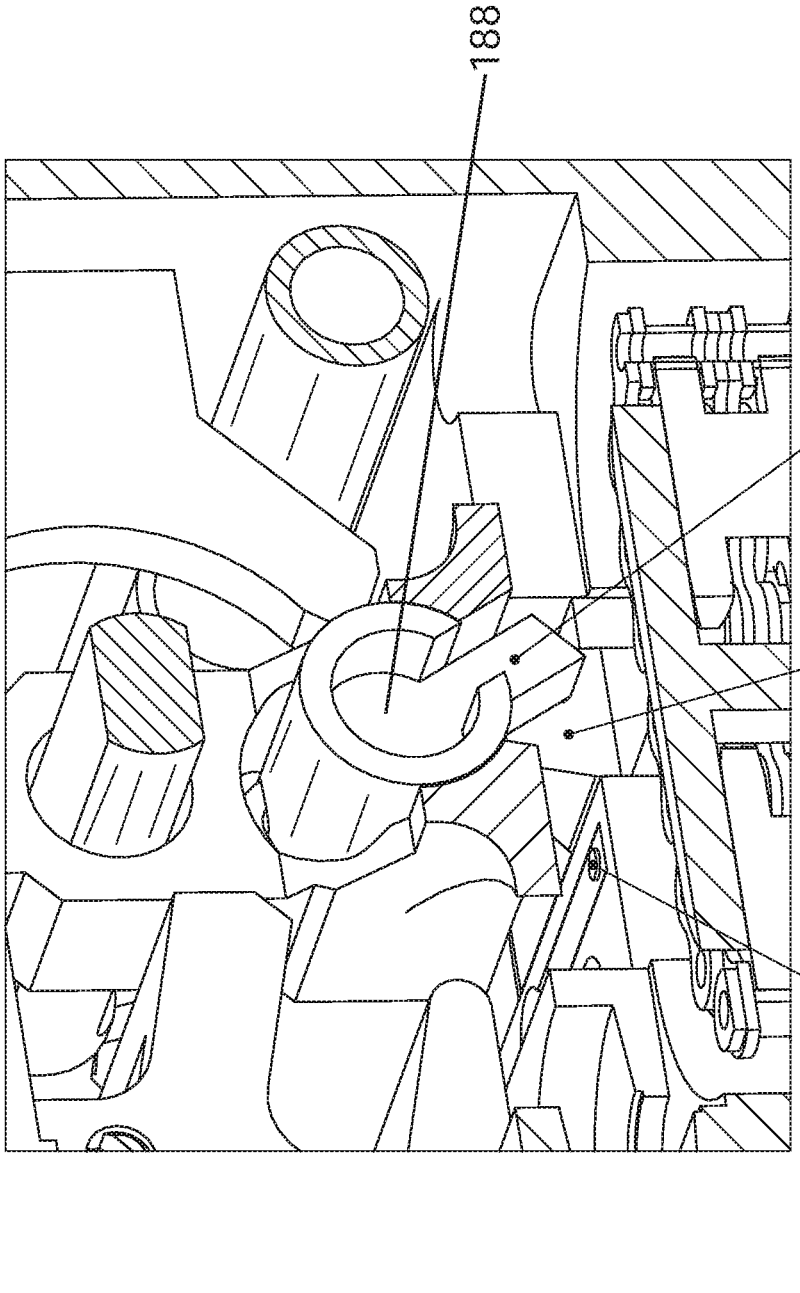
188
FIRING PIN TANG 216
FIRING PIN PAWL 270
PROXIMITY SENSOR 272

Fig. 15A

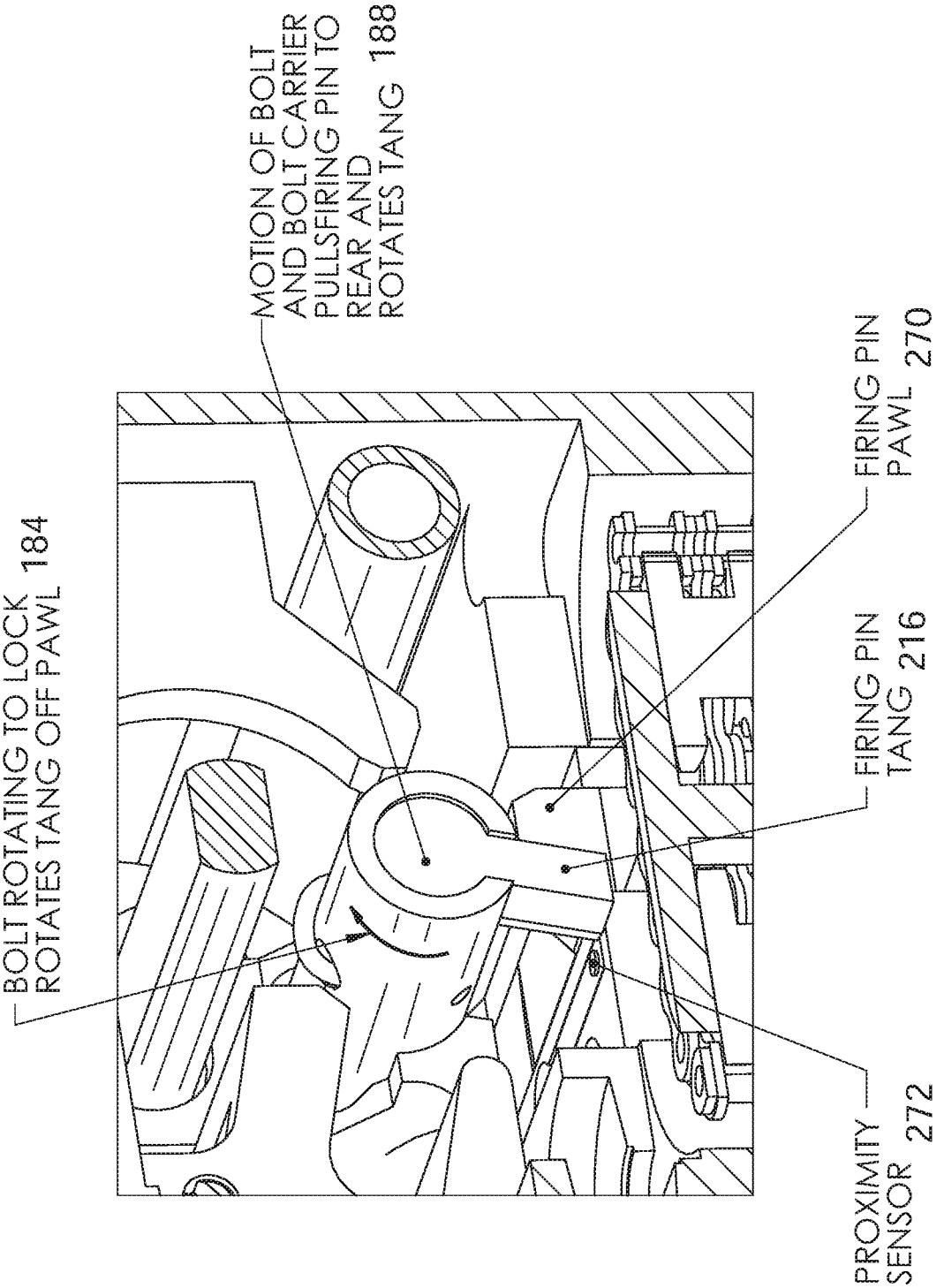
MOTION OF BOLT AND BOLT CARRIER PULLSFIRING PIN TO REAR AND ROTATES TANG 188
BOLT ROTATING TO LOCK ROTATES TANG OFF PAWL 184
FIRING PIN PAWL 270
FIRING PIN TANG 216
PROXIMITY SENSOR 272

Fig. 15B

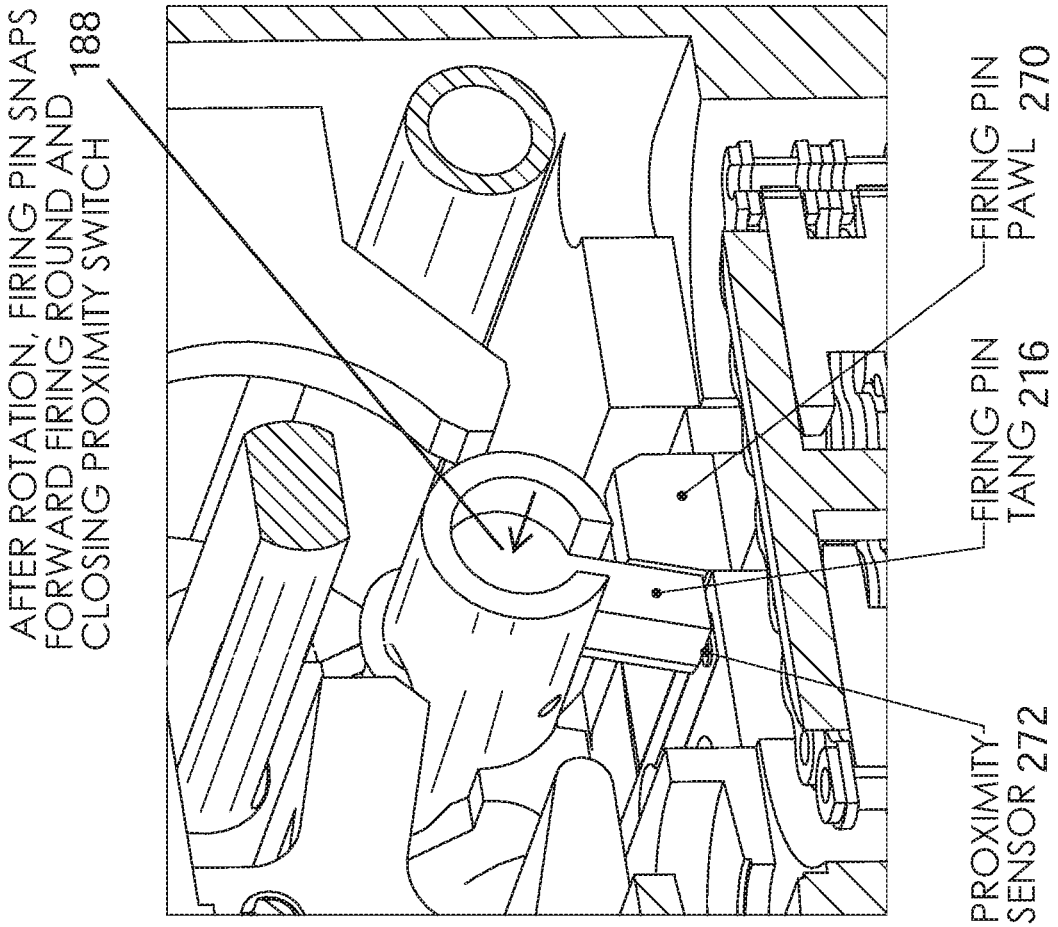
AFTER ROTATION, FIRING PIN SNAPS FORWARD FIRING ROUND AND CLOSING PROXIMITY SWITCH 188
FIRING PIN PAWL 270
FIRING PIN TANG 216
PROXIMITY SENSOR 272

Fig. 15C

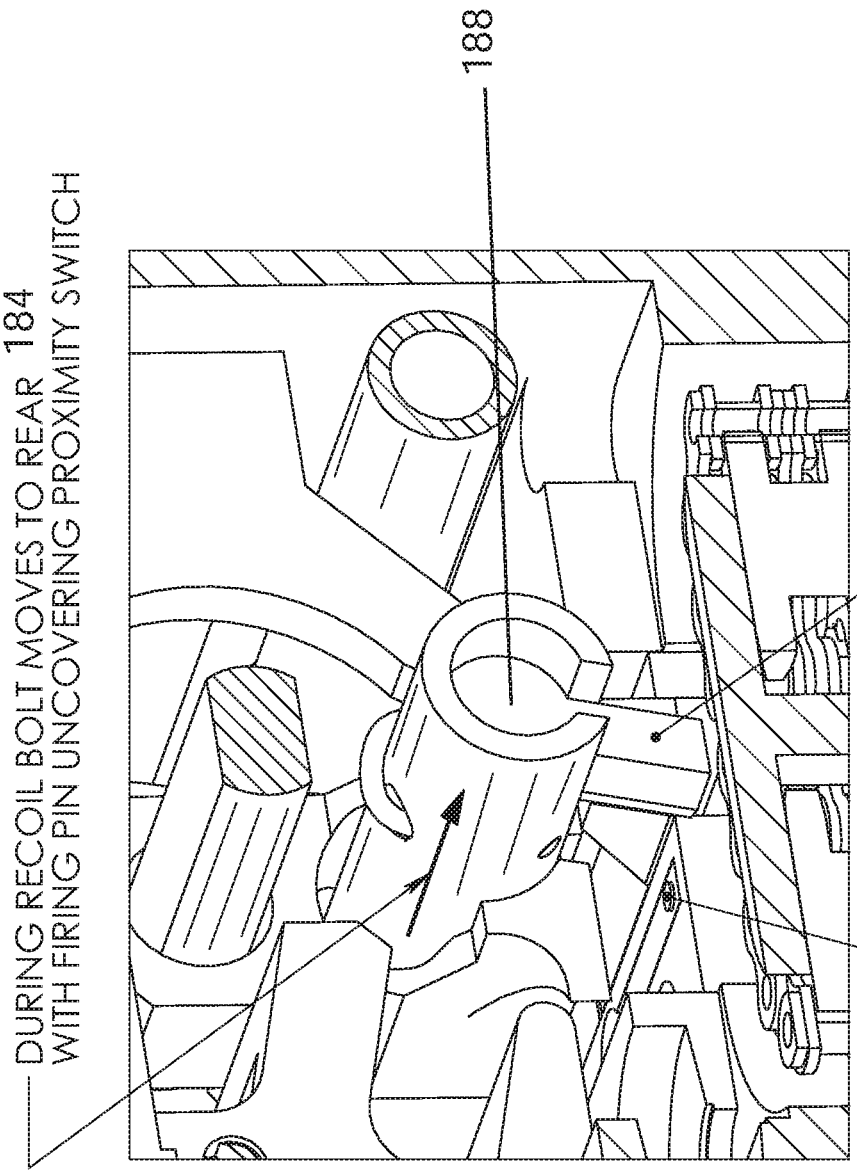
188
DURING RECOIL BOLT MOVES TO REAR 184
WITH FIRING PIN UNCOVERING PROXIMITY SWITCH
FIRING PIN
TANG 216
PROXIMITY
SENSOR 272

Fig. 15D

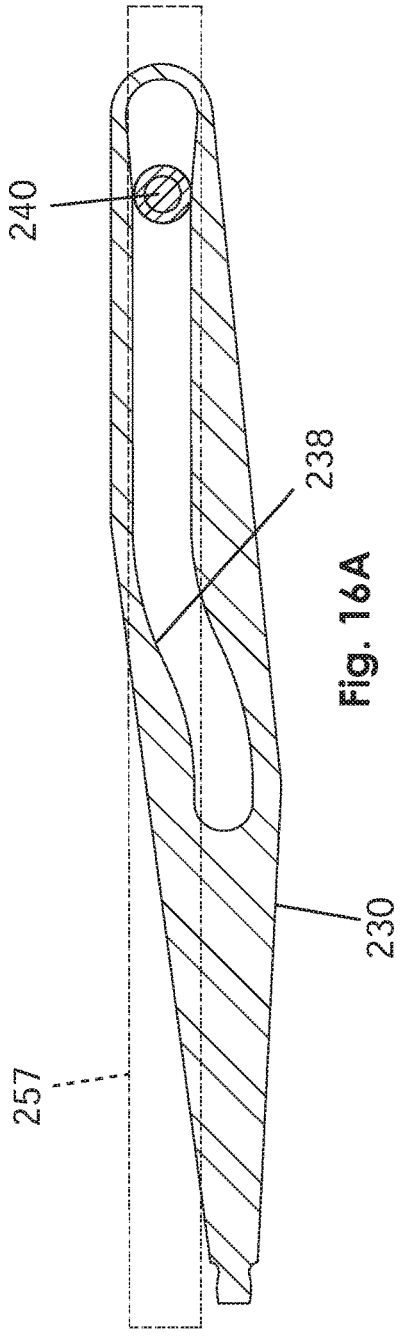

Fig. 16A

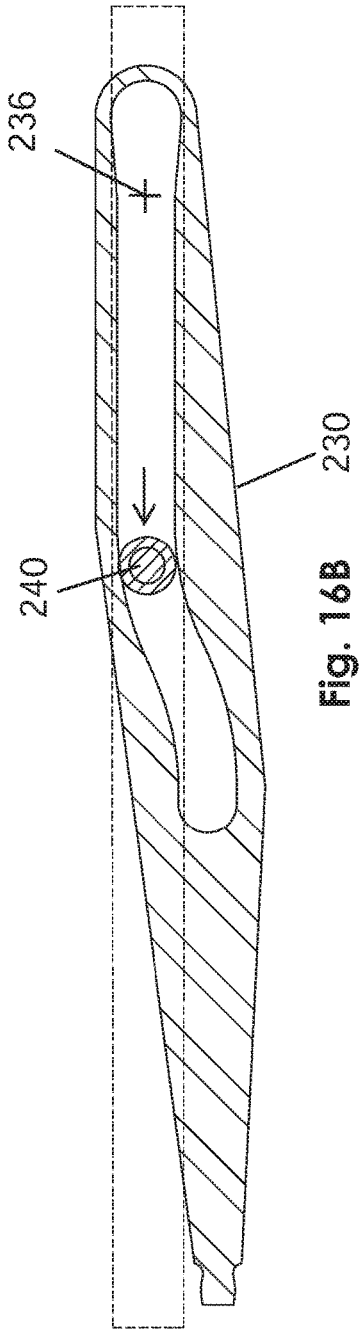

Fig. 16B

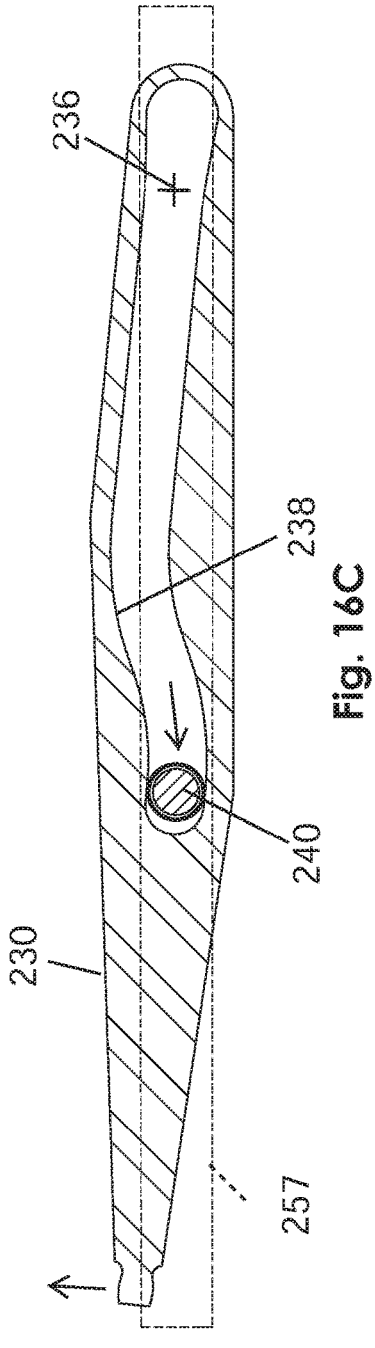

Fig. 16C

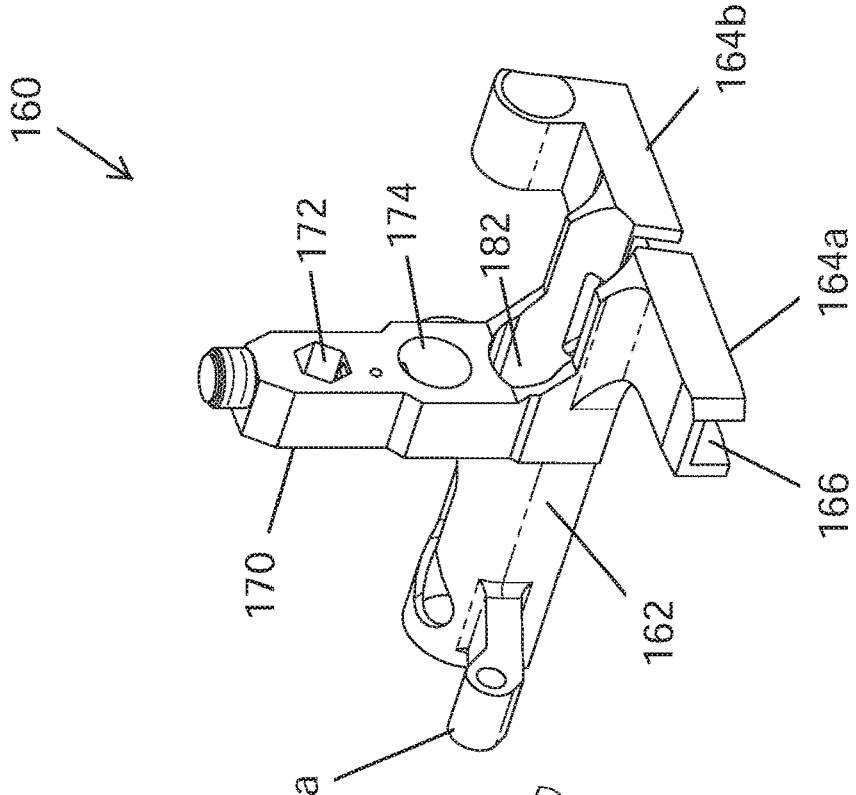

Fig. 17B

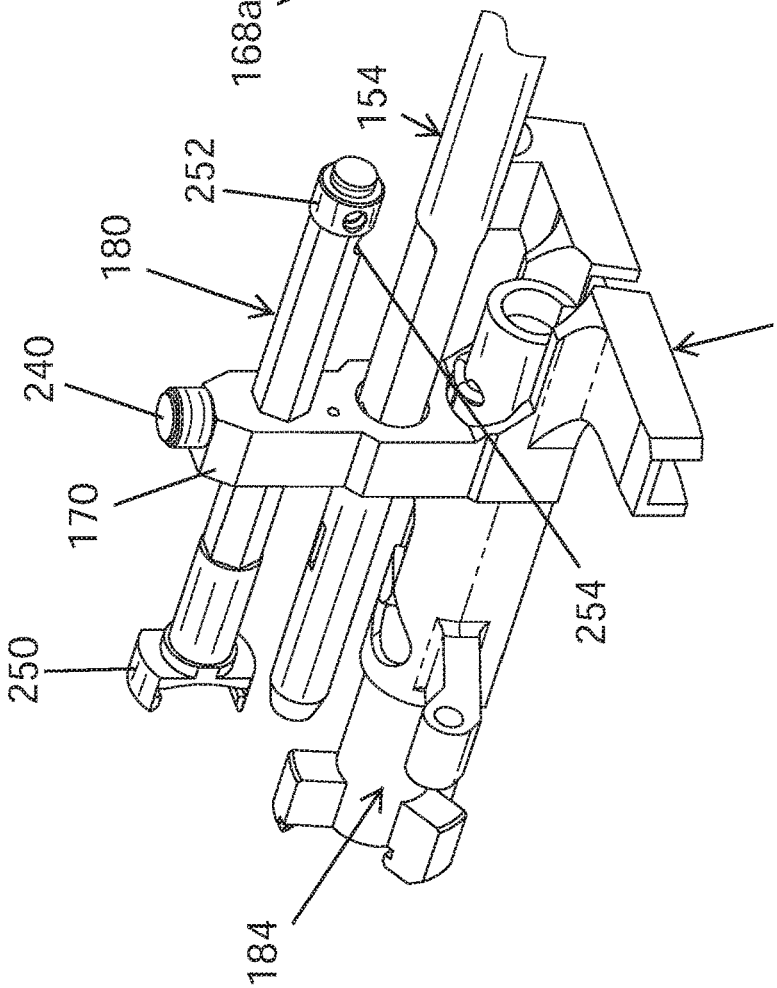

Fig. 17A

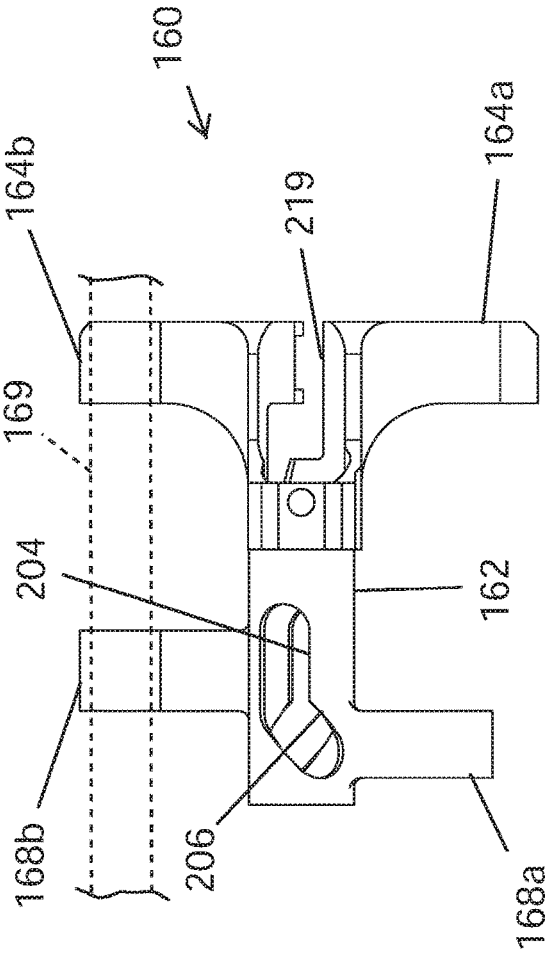

Fig. 18B

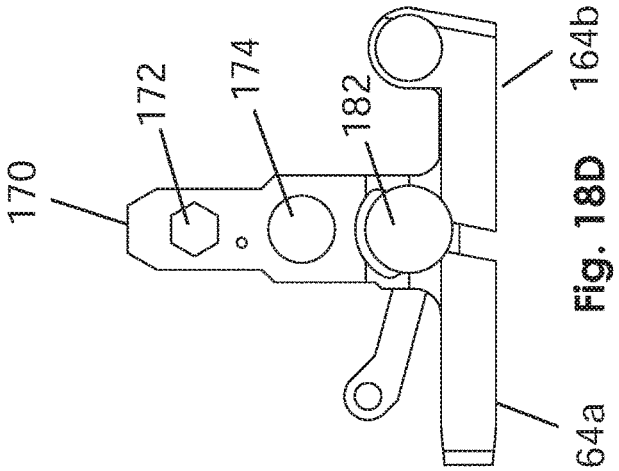

Fig. 18D

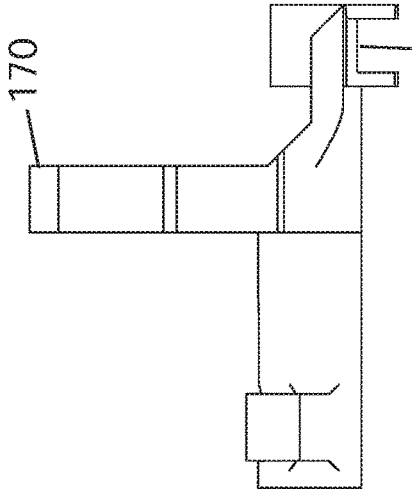

Fig. 18A

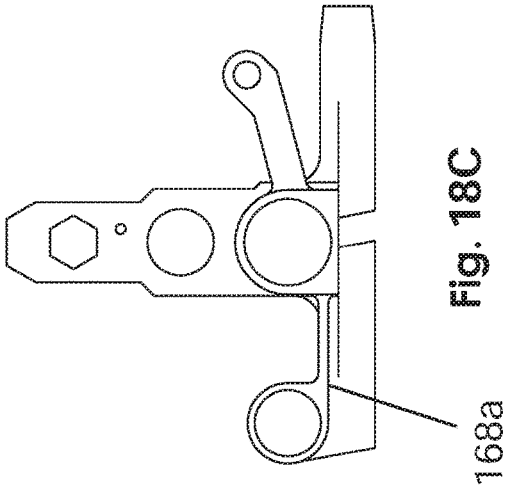

Fig. 18C

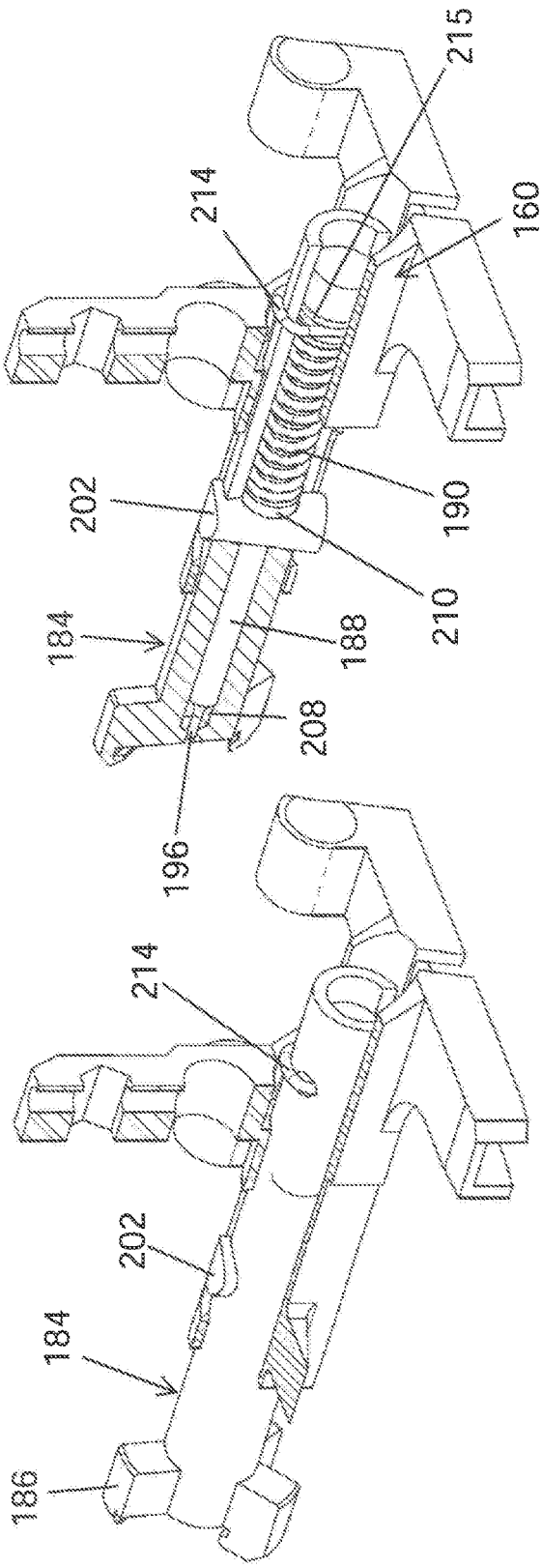

Fig. 19B

Fig 19A

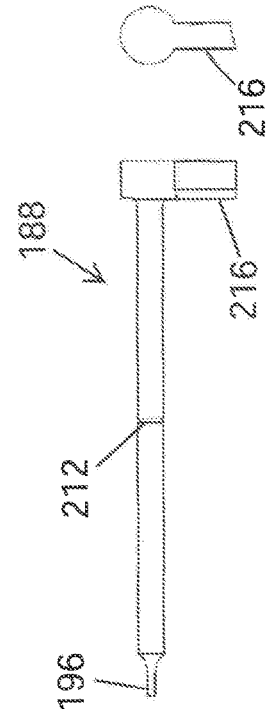

Fig. 20D

Fig. 20C

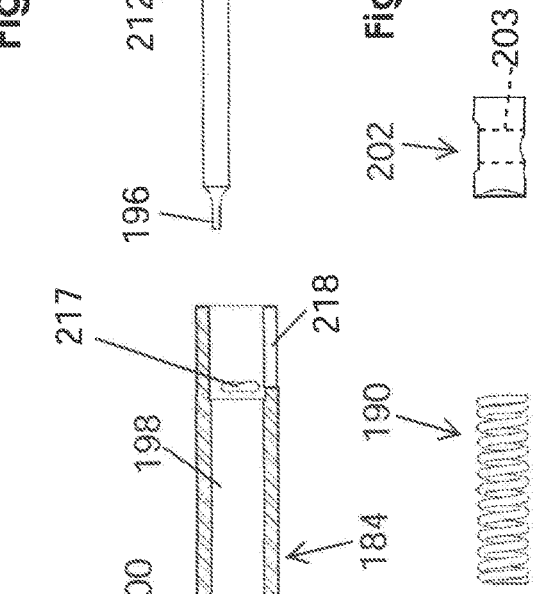

Fig. 20A

Fig. 20E

Fig. 20F

Fig. 20B

DELINKER MECHANISM FOR CHAIN-DRIVEN MACHINE GUN

RELATED APPLICATIONS

The present application is a continuation-in-part of U.S. application Ser. No. 16/378,264, filed Apr. 8, 2019, which is a continuation of U.S. application Ser. No. 16/101,493, filed Aug. 12, 2018, which is a continuation-in-part of U.S. application Ser. No. 15/887,111, filed Feb. 2, 2018, which claims priority under 35 USC § 119 to U.S. Provisional Application Ser. No. 62/453,682, filed Feb. 2, 2017, the entire disclosures of which are expressly incorporated herein.

FIELD OF THE INVENTION

The present invention is directed to a compact 50 caliber chain-driven machine gun system which utilizes an original Browning rear-stripping ammunition link design.

BACKGROUND OF THE INVENTION

Almost 100 years ago Mr. John Browning invented a series of Machine Guns which are still in use today. They were made in multiple calibers but the functioning of the mechanism was essentially identical across the series. The original intended use for them was as a TriPod ground mounted Infantry System. Over the years however these weapons were adapted to many other uses. From airplanes and ships and on top of tanks and trucks and jeeps. One of the most successful of these weapons is the 0.50 Cal BRG MG which is sometimes called the Ma Duce or M2 50 Cal. While the other Brownings have become obsolete and have been replaced by newer mechanisms and cartridges, the Ma Duce soldiers on. The reasons are first the potency of the round of ammunition and also the fact that it is in use by so many armed forces. Literally hundreds of millions of packed and linked rounds are in the inventory of armies around the world. In spite of this huge success there is one place where the Ma Duce has never been used successfully—as an enclosed mount on tanks and armored vehicles. The Browning 0.50 Cal just does not fit in those cramped and enclosed spaces, its receiver is just too long due to the rear-stripping action of the cartridge delinker. When applied to these types of vehicles it is always mounted externally on a post mount where the gunner is mortally exposed to enemy fire. Additionally, the gun and ammunition are vulnerable to all sorts of damage, from tree branches to artillery fragments and small arms fire.

Chain-driven automatic guns include an ammunition feed and delinker system that receives an ammunition belt of linked cartridges, sequentially separates or "delinks" the cartridges from the ammunition belt, and feeds the cartridges to the gun for firing. Reliability and controllability are the advantages of chain-driven weapons over their recoil-actuated counterparts. Recoil-actuated firearms depend upon the sometimes unreliable firing of a cartridge to power the cycle of action, whereas a chain-driven gun uses an electric motor to drive a chain that moves in a rectangular circuit via four sprockets that apply tension to the chain. One link of the chain is connected to the bolt assembly, moving it back and forth to load, fire, extract, and eject cartridges. One previous example of such a gun is described in U.S. Pat. No. 4,418,607, entitled "Single Barrel Externally Powered Gun," which is incorporated herein by reference.

The existing 0.50 caliber ammunition metallic "linked" belt is derived from the original cloth belt of the World War I era which was composed of two parallel cloth straps sewn together in which a series of pockets were formed so that rounds could be inserted along the length of the belt. The cartridges were pulled to the rear to remove them from the belt and then fed into the gun mechanism. Later the cloth was replaced by metal links but the cartridges were still removed to the rear. The function of removing the cartridge to the rear is the reason for the Browning's long receiver and its difficult vehicle mounting.

Several manufacturers have tried to fill this void with a 0.50 Cal gun designed for vehicle use but all have missed the mark for the same reason. They are all designed around a side stripping link instead of using the rear-stripping link that is already on those millions of rounds in the inventories around the world. Side stripping mechanisms separate cartridges laterally from the ammunition belt rather than pulling it rearward. Most modern ammunition links are either side stripping or forward stripping which allows for a much shorter bolt stroke and therefore a much more compact receiver and feeder assembly. The challenge is to approach that same compact shape while still using the original Browning rear-stripping link design to take advantage of the large number of 0.50 Cal ammunition belts in inventories around the world.

SUMMARY OF THE INVENTION

It is an object of the present invention to provide an improved chain driven machine gun that can first strip a linked cartridge axially to the rear from an ammunition belt link, as opposed to side stripping. A secondary object provides an improved and simplified electric anti-hangfire system.

The improved 50 caliber chain-driven gun of the present invention provides a number of advantages over prior art in that the improved design allows for rear extraction of rounds from the links, significantly shorter receiver for easier turret mounting, and simplified anti-hangfire protection. The chain-driven machine gun system features a delinker assembly configured to receive a belt of linked cartridges, separate each of the cartridge from the belt rearwardly, and feed each of the cartridges for firing. The delinking function is separated from the motion of the bolt assembly so as to reduce the overall length of the gun system. The receiver has a receiver mounting length RML from the rear base of each incoming cartridge in a belt of connected links to the rear end of the receiver that is less than 15 inches. A shuttle feed system is incorporated into the basic chain gun style mechanism which had been limited to a sprocket feed on all previous designs. An electronic anti-hangfire system uses a single proximity switch and the already existing parts and motions of the gun.

An exemplary rearward-stripping externally-powered gun disclosed herein comprises a receiver at the rear end of a longitudinal barrel, the receiver being configured to laterally receive a plurality of cartridges held within a series of connected links with a rear base of the cartridges facing to the rear. The receiver includes a motor and motor drive system, and a bolt carrier driven longitudinally forward and rearward by the motor drive system, the bolt carrier having a longitudinal tube and tower extending perpendicularly away from the tube. A bolt positioned within the longitudinal tube of the bolt carrier has a forward end with a cartridge grasper adapted to engage the rear base of a cartridge, the bolt being aligned with a breech and chamber of the barrel.

A feed shuttle is adapted to translate the laterally through the receiver. A delinker shaft arranged in the receiver to translate longitudinally toward and away from the feed shuttle has a forward end adapted to engage the rear base of a cartridge and remove one cartridge at a time from the connected links. The delinker shaft passes through a bore in the bolt carrier tower, wherein the delinker shaft is coupled by a lock member to periodically translate with the bolt carrier tower. A feed rotor is arranged to rotate about a longitudinal axis and transfer a cartridge from a delinked position engaged with the delinker shaft to a load position, whereby the cartridge is engaged by the cartridge grasper of the bolt. A feed rotor drive system driven by the motor drive system periodically rotates the feed rotor to transfer a cartridge from the delinked position to the load position. Finally, the motor drive system is configured to translate the bolt carrier forward until the delinker shaft is in position to engage the rear base of a cartridge, at which point the lock member decouples further forward translation of the bolt carrier from the delinker shaft, and the bolt carrier continues forward to displace the bolt and a cartridge engaged thereby forward and deliver the cartridge to the chamber to be fired.

A method of operating a rearward-stripping externally-powered gun is disclosed. The gun has a receiver at the rear end of a longitudinal barrel, the receiver having a motor and motor drive system and being configured to laterally receive a plurality of cartridges held within a series of connected links with a rear base of the cartridges facing to the rear. A bolt carrier is driven longitudinally forward and rearward by the motor drive system, the bolt carrier having a longitudinal tube and tower extending perpendicularly away from the tube. A bolt is positioned within the longitudinal tube of the bolt carrier and has a forward end with a cartridge grasper adapted to engage the rear base of a cartridge, the bolt being aligned with a breech and chamber of the barrel. Cartridges are translated laterally through the receiver, while a delinker shaft translates longitudinally toward and away from the cartridges held within the connected links. The delinker shaft has a forward end adapted to engage the rear base of a cartridge and remove one cartridge at a time from the connected links. The delinker shaft passes through a delinker bore in the bolt carrier tower, and is coupled by a lock member to periodically translate with the bolt carrier tower. The method includes rotating a feed rotor about a longitudinal axis and transferring a cartridge from a delinked position engaged with the delinker shaft to a load position whereby the cartridge is engaged by the cartridge grasper of the bolt. The bolt carrier is translated forward until the delinker shaft is in position to engage the rear base of a cartridge, whereby the lock member decouples further forward translation of the bolt carrier from the delinker shaft, and the bolt carrier continues forward to displace the bolt and a cartridge engaged thereby forward and deliver the cartridge to the chamber to be fired.

Another method of operating the rearward-stripping externally-powered gun is provided, comprising driving a bolt carrier longitudinally forward and rearward with the motor drive system, the bolt carrier carrying a bolt having a forward end with a cartridge grasper adapted to engage the rear base of a cartridge, the bolt being aligned with a breech and chamber of the barrel. Translating the cartridges laterally through the receiver, and translating a delinker shaft longitudinally forward and rearward with the bolt carrier. The delinker shaft has a forward end adapted to engage the rear base of a cartridge and remove one cartridge at a time from the connected links when translated rearward. The delinker shaft is coupled by a movable lock member to periodically translate with the bolt carrier, wherein the bolt carrier translates the delinker shaft forward until the delinker shaft is in position to engage the rear base of a cartridge, whereby the lock member moves and decouples further forward translation of the delinker shaft from the bolt carrier, and the bolt carrier continues forward to displace the bolt and a cartridge engaged thereby forward and deliver the cartridge to the chamber to be fired. The method also includes periodically rotating a feed rotor about a longitudinal axis with the motor drive system, the feed rotor being configured to transfer a cartridge from a delinked position engaged with the delinker shaft to a load position whereby the cartridge is engaged by the cartridge grasper of the bolt.

One object of the application is a controllable delinker that allows for the delinking function to be separated from the motion of the bolt assembly so as to reduce the overall length of the gun system.

An improved chain-driven machine gun disclosed herein comprises a delinker assembly configured to receive a belt of linked cartridges, separate each of the cartridge from the belt rearwardly, and feed each of the cartridges for firing.

A further object is a delinker system that is controllably detached from the rest of the mechanism so as to reduce its required travel and permit shortening the overall size of the associated gun mechanism.

Another object is a shuttle feed system incorporated into the basic chain gun style mechanism, which previously had been limited to a sprocket feed on all previous designs

An object is also incorporation of a shuttle feed heretofore associated with self-powered guns to the mechanism of a "chain gun" style weapon

An improved chain gun anti-hangfire mechanism utilizes an electronic proximity sensor and a logic circuit, working in conjunction with the gun firing pin.

An electronic anti-hangfire system which uses a single proximity switch and the already existing parts and motions of the gun. The prior art required several parts, a solenoid and springs to accomplish the same function.

A further understanding of the nature and advantages of the invention will become apparent by reference to the remaining portions of the specification and drawings.

BRIEF DESCRIPTION OF THE DRAWINGS

Features and advantages of the present invention will become appreciated as the same become better understood with reference to the specification, claims, and appended drawings.

It should be noted that some Figures that depict the operation of the chain-driven automatic gun that are denoted with "A" and "B" show identical snapshots except that the "A" version is a longitudinal section while the "B" version is a cutaway perspective. In others, the "B" version has shading indicating depth features while the "A" version does not.

FIG. **1** is a diagrammatic view of the interior working parts of the gun in accordance with the prior art;

FIGS. **2**A and **2**B are front and rear perspective views of a compact 50 caliber chain-driven machine gun of the present invention with a relatively short receiver, while FIG. **2**C is a side elevational view thereof, and FIG. **2**D is a side elevational view of a conventional Browning 50 caliber machine gun of the prior art having a longer receiver;

FIGS. **2**E-**2**G are cutaway perspective and lateral sectional views of the delinking and firing mechanism of the compact 50 caliber chain-driven machine gun of the present application;

FIG. **3**A is a longitudinal sectional view of the delinking and firing mechanism of the present application in an operation step of a sear position prior to delinking a 50 caliber cartridge or round, and FIG. **3**B is a cutaway perspective view;

FIG. **4**A is a longitudinal sectional view and FIG. **4**B is a cutaway perspective view of the delinking and firing mechanism after forward movement of a bolt assembly which moves a delinker forward into position ready to engage a cartridge;

FIG. **5**A is a longitudinal sectional view and FIG. **5**B is a cutaway perspective view of the delinking and firing mechanism after further forward movement of the bolt assembly to the extent of its travel which cycles the feed cam and shuttle, thus moving a round into the delinker;

FIG. **6**A is a longitudinal sectional view and FIG. **6**B is a cutaway perspective view of the mechanism during an operation step of laterally feeding a cartridge from the ammunition belt of linked cartridges into engagement with a delinker;

FIG. **7**A is a longitudinal sectional view and FIG. **7**B is a cutaway perspective view of the delinking and firing mechanism during further rearward movement of the bolt assembly at the point of engaging the delinker for rearward movement so as to delink a cartridge from a cartridge belt, and also when the feed cam returns the feed shuttle to its starting point;

FIG. **8**A is a longitudinal sectional view and FIG. **8**B is a cutaway perspective view of the delinking and firing mechanism showing further rearward movement of the bolt assembly and delinker fully delinking the cartridge;

FIG. **9** is a longitudinal sectional view of the delinking and firing mechanism just prior to the feed rotor rotating the cartridge to be chambered and fired;

FIG. **10**A is a longitudinal sectional view and FIG. **10**B is a cutaway perspective view of the delinking and firing mechanism showing rotation of a feed rotor to move the delinked cartridge in line with the bolt assembly and into position to be chambered;

FIG. **11** is a longitudinal sectional view of the delinking and firing mechanism during an operation step of a first round being chambered;

FIG. **12**A is a longitudinal sectional view and FIG. **12**B is a cutaway perspective view of the delinking and firing mechanism with the round fully chambered and showing the delinker moved forward into position to engage the second round in the belt;

FIG. **13** is a longitudinal sectional view of the delinking and firing mechanism during an operation step of a first round being fired and a second cartridge being fed to the delinker;

FIG. **14** is a perspective view cutaway along a lateral vertical section through the delinking and firing mechanism showing a rear end of the bolt assembly and an anti-hang fire mechanism that eliminates the hazards of a delayed functioning, or hangfire, of a fired round of ammunition; and

FIGS. **15**A-**15**D are enlarged views of a rear end of a firing pin and firing pin tang which rotates to ensure that there is no delayed functioning, or hangfire, of a fired round of ammunition;

FIGS. **16**A-**16**C are horizontal sectional views of a feed cam showing a contoured inner channel and sequential movement of a feed cam roller therein;

FIG. **17**A is a perspective view of a bolt carrier assembled with several shafts configured for sliding movement therethrough, and FIG. **17**B is a perspective view of just the bolt carrier;

FIGS. **18**A-**18**D are orthogonal views of the bolt carrier;

FIG. **19**A and **19**B are cutaway perspective views of the bolt carrier showing a bolt assembly integrated therewith; and

FIGS. **20**A-**20**F are several orthogonal and sectional views of the bolt assembly and a firing pin and spring that are incorporated therein.

DETAILED DESCRIPTION OF THE PREFERRED EMBODIMENTS

The present application is directed to externally-powered automatic guns such as a chain-driven gun. Guns are broadly segregated into externally-powered or motorized guns and self-powered guns which rely on a spring recoil action or a gas spring. Externally-powered guns have a motor that drives a chain, cam or crank and connecting rod, as well as other mechanisms to engage and move the various cooperating parts (e.g., bolt and carrier) in synch. All of these will collectively be termed a "drive system" which is motor operated.

More specifically, the present application relates to an improved chain-driven automatic gun with a bolt carrier and delinker combination for rearward extraction of rounds from an ammunition belt of linked cartridges, which provides improved performance and requires less maintenance than the existing chain-driven guns. In particular, the application describes a compact 50 caliber system which utilizes an original Browning rear-stripping ammunition link design.

In most modern light machine guns the link stripping motion is performed by the bolt on its forward motion and is directly related to the total stroke of the bolt and bolt carrier. In the Chain Gun and Gatling series of machine guns, the link is stripped sideways from the link by a sprocket and then passed to the bolt by a transfer sprocket or rotor. In both of these systems the cartridge travels the stroke of the bolt. This system works well and allows mounting of the guns inside tanks or armored vehicles because of the short stroke and consequent short length of the gun. This mounting advantage, however, has not been possible for guns that rely on rearward-stripping links, like the M2 50 Cal.

According to the present invention, there is provided an improved chain driven machine gun. The gun includes five principal functional assemblies, i.e., a chain drive or bolt control assembly, a bolt assembly, a barrel assembly, a feeder assembly and a power transmission system. In its simplest form, the system is an externally powered mechanism in which the gun barrel is fixed in the sense that it does not cycle or rotate.

FIG. **1** schematically illustrates the main components of a chain-driven delinking system when using a side-stripping ammunition belt, as in U.S. Pat. No. 4,418,607. The principal functional components of the gun include a feeder assembly generally designated **35** which cooperates with a bolt assembly **40**, the latter movable by a chain cam assembly generally indicated at **45**. A power transmission assembly for the synchronous movement of the various parts includes the motor **20** and gear reducer **21**, the output of which drives an inner drive shaft **46** and an outer concentric shaft **47**. The gear reducer **21** operates to reduce motor output speed by a factor of 2.3 to 1 to drive the inner drive shaft **46**, while the outer concentrically arranged output shaft **47** is reduced by a further 16 to 1 ratio. The output of shaft **46** is the right angle bevel gear drive **49** having a 1 to 1 ratio, the bevel gears being positioned in a housing. The shaft **51** of gear set **49** connects to a set of spur gears **50** located in

a gear housing. Spur gears **50** form the power source for the chain drive assembly **45** which in turn operates a Geneva gear assembly **55**. In this form, the Geneva gear assembly **55** operates as a positively driven intermittent motion device to interface the constant velocity feeding with the intermittent bolt operation.

The output of the Geneva gear assembly operates a second bevel gear set **57**, the output of which is connected to a feed rotor **60**, the latter part of the feeder assembly. Cooperating with the feed rotor **60** is a feed sprocket generally designated **62**, the latter driven by shaft **47**. The outer drive shaft **47** has affixed to it the feed sprockets **62**, each having four teeth, as illustrated in FIG. **1**, which operate to advance a round to the feed rotor **60**. Various other numbered components of the chain-driven delinking system shown in FIG. **1** are described in U.S. Pat. No. 4,418,607, expressly incorporated herein, and will not be further detailed.

Overview

FIGS. **2**A and **2**B are front and rear perspective views of a compact 50 caliber chain-driven machine gun **110** of the present invention, and FIG. **2**C is a side elevational view thereof. The gun has a relatively short receiver **112** on a rear end in which a delinking and firing mechanism is housed and an elongated barrel **114**. The receiver **112** is a generally rectilinear box. A series of cartridges **118** held in a flexible belt of links **119** are guided through a lateral slot above the receiver **112** by a feeder enclosed within a feed cover **120**. At the rear of the receiver **112**, a feeder gearbox **122** transmits power from a chain drive system (not shown) mounted in the receiver **112** to components within the receiver and feed cover **120**. The end result is delinking of individual cartridges **118** as they pass over the receiver **112** and sequential rapid loading and firing of the cartridges through the barrel **114**. The cartridges **118** pass laterally across a top portion of the receiver **112** and are sequentially delinked to the rear from the belt. One-by-one, the cartridges are delinked and fed into a chamber **124** defined within a rear end of the barrel **114** (FIG. **3**A) of the gun for firing, then the spent cartridge case is ejected. FIG. **3**A also shows a breech **125** surrounding the rear end of the barrel **114** which will be described below.

The total length L of the gun **110** as shown in FIG. **2**C is typically between 55-65 inches, and in one embodiment is 60.2 inches. In the gun described herein, an axial mounting length RML defined by the receiver is preferably less than 15 inches, more preferably between 12-15 inches, and in one embodiment is 13.2 inches. The receiver mounting length RML is defined as the distance from the base or rear end of each incoming cartridge/round in the feeder of the gun to the rear end of the receiver. The reduced mounting length RML of the receiver beneficially makes it easier to mount the gun of the present application within an enclosed space on tanks and armored vehicles.

FIG. **2**D is a side elevational view of a conventional Browning 50 caliber machine gun **130** showing the longer receiver **132**, having a receiver mounting length RML normally around 20 inches (19.8 in one specific version), for a gun having a total length L of again between 55-65 inches, usually 63 inches. The longer receiver **132** adds length which makes it challenging to mount the gun **110** within an enclosed space on tanks and armored vehicles. The reduction in the receiver mounting length RML for the two guns is indicated in FIG. **2**C at A, which is between about 8-9 inches. This difference enables greater flexibility in choice when mounting the gun **110** of the present application in enclosed spaces.

FIGS. **2-13** illustrate various operational components within the receiver **112** of the chain gun **110** which enable the shorter receiver mounting length RML. The gun **110** utilizes a chain drive which may be similar to that shown and described in U.S. Pat. No. 4,418,607, or in other references, but certain functional components common to such guns are modified within the receiver **112**. Namely, a delinking function which pulls individual cartridges from a link of cartridges is separated from the motion of a bolt assembly so as to reduce the overall length of the gun system, as will be described. Prior to a discussion of a sequence of operation, the main parts of the gun **110** will be identified, which parts may be seen in various of the figures in which the side of the receiver **112** has been removed for clarity.

As best seen in FIG. **3**B, the main operational components within the receiver **112** are shown. As mentioned above, a chain drive system in the lower portion of the receiver comprises a motor **140** connected to a chain drive gearbox **142** which drives the chain **144**. The chain **144** interacts with several components of the receiver, including via a vertical shaft **148** a rear Geneva Drive **146** which forms a part of the aforementioned feeder gearbox **122**.

FIG. **5**B shows the upstanding shaft **148** from the Geneva Drive **146** connected to rotate a first pinion gear **150** engaged with a second pinion gear **152**. The axis of rotation of the first pinion gear **150** is vertical, while the second pinion gear **152** rotates along a horizontal longitudinal axis and drives a feed rotor shaft **154**. The feed rotor shaft **154**, in turn, rotates a feed rotor **156** which transfers the cartridges **118** from the location where they are delinked to an internal location where they may be advanced into the firing chamber and fired. As will be clear below, the feed rotor **156** carries a delinked cartridge 180° from alignment with a cartridge delinker to a lower position in line with the bolt assembly and chamber **124**. Because of the relative size difference between the first and second pinion gears **150**, **152**, a 90° rotation of the first pinion gear rotates the second pinion gear 180°.

Bolt Carrier

The feed rotor shaft **154** freely slides longitudinally through a bore formed in a bolt carrier **160**, described in detail below. The bolt carrier **160** is seen in greater detail in FIGS. **17-18**, and comprises an irregular structure that interacts with a number of different components within the receiver **112**. More specifically, FIG. **17**A is a perspective view of a bolt carrier **160** assembled with several shafts configured for sliding movement therethrough, while FIG. **17**B is a perspective view and FIGS. **18**A-**18**D are orthogonal views of just the bolt carrier.

It will be understood that when assembled in the receiver **112**, the left side in FIG. **18**B is in the forward direction toward the barrel **114**, while the right side is to the rear, with the left-right axis being aligned with the longitudinal/horizontal directions. Moreover, the front and rear elevational views of FIGS. **18**C and **18**D, respectively, define the vertical up and down directions. The bolt carrier **160** as seen from above in FIG. **18**B has an offset H-shape with a central longitudinal tube **162** forming the middle bridge in the "H". At the rear end of the tube **162**, a pair of lateral arms **164***a*, **164***b* extend outward at a relatively low elevation and define thereby a downwardly-directed channel **166**. As will be explained below, the channel **166** receives a bolt drive pin that projects upward and is carried by the chain **144** which moves the bolt carrier **160**. Toward the front end of the tube **162**, a second pair of lateral arms **168***a*, **168***b* extend outward, albeit at offset longitudinal positions along the tube **162**. The lateral arms **164***b*, **168***b* on the right side define

aligned throughbores that receive and slide along a guide rod **169**, also seen in FIG. **2**G. The guide rod **169** ensures linear movement of the bolt carrier **160** within the receiver **112**.

As seen in FIGS. **17**B and **18**A, a bolt carrier tower **170** is a column that extends upward from an approximate midpoint of the longitudinal tube **162**. The bolt carrier tower **170** serves to coordinate and align the movements of several key components of the receiver **112**. As seen in FIGS. **17**A and **17**B, the bolt carrier tower **170** has two longitudinally-oriented throughbores **172**, **174**. An upper hexagonal delinker throughbore **172** receives for sliding movement therein a delinker shaft **180**, which also has a hexagonal cross-section to prevent relative rotation in the throughbore **172**. (Although hexagonal mating shapes are considered preferable, other mating shapes to prevent rotation are contemplated, such as a simple flat on one side of both positive and negative elements, a key and keyway, octagonal, etc. Suffice it to say, the delinker shaft **180** slides freely through but is prevented from rotation by the throughbore **172** in the bolt carrier **160**.) A lower cylindrical throughbore **174** receives for sliding movement and rotation therein the aforementioned feed rotor shaft **154**.

Bolt Assembly

With reference again to FIGS. **17**B and **18**D, the bolt carrier **160** further includes a lower guide bore **182** defined within the central longitudinal tube **162**. The guide bore **182** is sized to closely receive for longitudinal and rotation movement therein a bolt assembly including a bolt **184**, as seen in FIG. **17**A and in more detail in FIGS. **19**A/**19**B and **20**A/**20**B.

The bolt **184** is a generally tubular structure having a three-pronged cartridge grasper **186** on a forward end and housing therein a firing pin **188** and firing spring **190**. The bolt **184** has a forward passage **192** sized to receive a cylindrical main body portion of the firing pin **188** and leading to a narrow firing pin bore **194** which receives a forward nose **196** of the firing pin **188**. The bolt **184** has a rear passage **198** with a larger diameter than the forward passage **192** and separated therefrom by a lateral channel **200**. As seen in FIG. **19**B and elsewhere, the firing spring **190** is sized to be closely received in the rear passage **198** and a rearward section of the firing pin **188** extends through the inner bore of the spring.

As seen best in FIG. **19**B, a cam pin **202** extends laterally through the lateral channel **200**. The cam pin **202** features a lateral through bore **203** which receives the firing pin **188**. The cam pin **202** projects radially on both ends beyond the exterior of the bolt **184** and is received within a pair of similarly-shaped cam slots **204** formed in the longitudinal tube **162** of the bolt carrier **160**, seen from above in FIG. **18**B. The cam slots **204** each have a longitudinally-oriented portion leading to a forward angled portion **206**. Because the cam slots **204** cause rotational movement of the cam pin **202** and thus the bolt **184**, the angled portions **206** are offset in the same rotational orientation around the longitudinal tube **162**.

With reference again to the cutaway view of FIG. **19**B, the firing pin **188** is shown within the longitudinal passages **192**, **198** of the bolt **184** such that the forward nose **196** is positioned within but not beyond the firing pin bore **194**. A small space **208** is thus formed within the forward passage **192** to accommodate forward movement of the firing pin **188**. Although not shown, a cartridge **118** held within the three-pronged cartridge grasper **186** is positioned such that the forward nose **196** of the firing pin **188** can strike the rear center of and thus fire the cartridge. The force needed to fire the cartridge **118** is provided by the firing spring **190**.

It is important to note that the firing spring **190** is constrained between a forward collar **210** fixed around a groove and circlip **212** on the firing pin **188** and a horseshoe clip **214** that extends into the rear passage **198** from outside of the bolt **184** and longitudinal tube **162** of the bolt carrier **160**. The forward collar **210** initially abuts the cam pin **202**. The rear of the spring **190** is constrained from rearward movement by the horseshoe clip **214** and mating collar **215**, with the clip **214** also engaging a pair of vertical slots **217** in opposite sides of the bolt **184** (see FIG. **20**A). In this regard, the horseshoe clip **214**, and thus the rear of the spring **190**, is held with respect to the bolt **184**. As the carrier **160** moves forward, the firing pin **188** is restrained by a fixed pawl **270** within the receiver **112** (FIG. **15**A). This movement pulls the collars **210**, **215** rearward relative to the horseshoe clip **214**, which continues to move forward with the carrier **160**, thus compressing the firing spring **190**.

Operation

FIGS. **2**E-**2**G are cutaway perspective and lateral sectional views of the delinking and firing mechanism of the compact 50 caliber chain-driven machine gun of the present application. As shown, the bolt carrier **160** is positioned within the mechanism such that the vertical bolt carrier tower **170** generally aligns the upper hexagonal throughbore **172** (see FIG. **17**B) and the delinker shaft **180** carried thereby with the lateral slot above the receiver **112** through which the cartridges **118** in their flexible belt of links **119** are guided. The delinker shaft **180** thus serves to decouple or delink each of the cartridges **118** from the belt of links **119**. Similarly, the lower cylindrical through bore **174** (FIG. **17**B) and the feed rotor shaft **154** that passes therethrough are vertically aligned with the feed rotor **156** which serves to transfer each cartridge **118** down from the delinking area to the area of the firing chamber. Finally, the bolt **184** is at a low elevation that aligns with the chamber **124** (FIG. **3**A) for receiving the cartridges **118**, and ultimately with the gun barrel **114**.

FIGS. **2**E and **2**F show an assembly within the feed cover **120** for advancing the cartridges **118** in step-wise fashion from left-to-right as shown to be available for the delinker shaft **180**. Namely, a feed cam **230** resembling an elongated arm has a forward end **232** that reciprocates laterally due to a horizontal pivoting of the feed cam, as will be explained. The forward end **232** engages an aperture in a feed shuttle **234** that slides laterally over the belt of links **119** holding the cartridges **118**. The feed shuttle **234** has a ratchet-style mechanism (not shown) on its underside which translates the belt of links **119** in one direction only (to the right in FIG. **2**F). That is, the feed shuttle **234** engages the links **119** when moving to the right, but slides past the links **119** when returning to the left.

The feed cam **230** pivots about a rear pin **236** fixed in the feed cover **120**, as seen in FIG. **2**B. The shape of the feed cover **120** generally describes the reciprocal pivoting of the feed cam **230**. As seen best in FIGS. **3**B and **5**B, the feed cam **230** has an inner channel defining contoured inner walls **238** which are in contact with a feed cam drive roller **240** at the top of the bolt carrier **160**.

The shape of the inner channel of the feed cam **230** is seen in FIGS. **16**A-**16**C which are horizontal sectional views of the feed cam showing sequential movement of the feed cam drive roller **240** therein. In particular, longitudinal movement of the bolt carrier **160** causes the feed cam drive roller **240** to engage the contoured inner walls **238** and thus pivot the feed cam **230**. As a result, reciprocal axial movement of the bolt carrier **160** and its roller **240** causes the feed cam **230** to rock back and forth which in turn drives the feed

shuttle **234** to displace one cartridge **118** at a time into alignment with the front end of the delinker shaft **180**.

Now with reference to FIG. **2**G, a lateral vertical section at the rear end shows various key components, including the delinker shaft **180** and feed rotor shaft **154**, which extend longitudinally in parallel and pass through the aforementioned bores **172**, **174** in the tower **170** (FIG. **17**B) of the bolt carrier **160**.

FIG. **3**A is a longitudinal sectional view of the delinking and firing mechanism of the present application in an operation step of a sear position prior to delinking a 50 caliber round or cartridge **118**, and FIG. **3**B is a cutaway perspective view of the same step. A cartridge **118** is seen at the upper left in FIG. **3**A held within the belt of links **119**. In FIG. **3**A, the cartridge **118** is the first to be fired from the gun, and no cartridge can be seen within the chamber **124**, though in the middle of a sequence of firing, FIG. **3**A would show a just-fired cartridge within the chamber. The cartridge **118** can be seen in step-by-step sequence in FIGS. **3-14** as it transitions from the belt to a firing position.

All the various operating steps are driven by the chain **144**, which is tensioned around four sprockets arranged in a rectangular pattern. An upwardly-projecting bolt drive pin **242** (FIG. **3**A) fixed with respect to the chain **144** is mounted on a master link **244** and engages the bolt carrier **160**. As the upward pin **242** travels forward along one of the long sides of the rectangular chain travel, it drives the bolt carrier **160** forward. Conversely, when the upward pin **242** travels rearward along the other long side of rectangular chain travel, it brings the bolt carrier **160** rearward. When the pin **242** travels laterally across the receiver **112** and along the channel **166** defined by the lateral arms **164***a*, **164***b* of the bolt carrier **160**, the carrier dwells or pauses its longitudinal movements. During one of these dwells, a lower Geneva drive pin **246** (FIG. **3**A) projecting down from the master link **244** enters one of four slots in the Geneva drive **146** located at a rear end of the receiver and rotates the drive 90°. As explained elsewhere, rotation of the Geneva drive **146** ultimately causes rotation of the feed rotor **156** which transfers the cartridges **118** from the delinking location to the firing location.

In the first step of FIGS. **3**A and **3**B, the bolt carrier **160** is in a rearward position. As seen in FIGS. **17**B and **18**A, the channel **166** defined by the lateral arms **164***a*, **164***b* of the bolt carrier **160** receives the upwardly-projecting bolt drive pin **242** (FIG. **3**A). At this stage, the drive pin **242**, and the master link **244** from which it projects, is located at the rear of the chain drive **144**, at the outer extent of the left-side lateral arm **164***a* (FIG. **3**B). The chain **144** rotates in a CCW direction, and thus advancement of the chain carries the drive pin **242** laterally along the channel **166**, with the result that the bolt carrier **160** dwells or remains stationary.

At the same time, a lower Geneva drive pin **246** (FIG. **3**A) projecting down from the master link **244** enters one of four radial slots (not numbered) in the Geneva Drive **146**. CW movement of the chain **144** carries the drive pin **246** into the slot and rotates the Geneva Drive **146** in a CCW direction. This also rotates the first and second pinion gears **152** which in turn rotates the feed rotor shaft **154** and feed rotor **156**, though at this stage there is no cartridge **118** shown in position to be transferred to the firing chamber area.

FIGS. **4**A and **4**B show the delinking and firing mechanism after initial forward movement of the bolt assembly including the bolt **184**. As was described above, the bolt **184** is coupled to the longitudinal tube **162** of the bolt carrier **160** via the cam pin **202** in the cam slots **204**.

Prior to the stage seen in FIGS. **4**A and **4**B, the bolt carrier **160** is acted on by the chain drive **144** to move in a forward direction. That is, the bolt drive pin **242** eventually reaches the extent of its lateral rightward travel along the rear section of the chain drive **144** and turns a 90° corner (again CW) to commence forward motion. The drive pin **242** remains within the channel **166** defined by the lateral arms **164***a*, **164***b* of the bolt carrier **160** and thus acts on the inner walls of the channel to urge the bolt carrier **160** forward. Although not shown, the bolt carrier **160** is positioned within a cavity in the receiver **112** which permits sliding longitudinal movement therethrough between two positions, and is lubricated and guided to prevent binding.

Forward movement of the bolt carrier **160** moves the delinker shaft **180** forward into position to engage a cartridge **118**. The movement of the delinker shaft **180** during delinking, transferring and firing the cartridges requires an understanding of the interaction between movement of it and the bolt carrier **160**. With reference first to FIG. **17**A, the delinker shaft **180** has a forward end that terminates in a delinker grabber **250** comprising two bifurcated fingers with in-turned tabs forming a T-slot that receives the flange at the rear end of each cartridge **118**. FIG. **6**A shows the delinker grabber **250** engaged with the first cartridge **118** in this manner.

The delinker shaft **180** further includes a collar **252** fixed to a rear end thereof via a pin or similar expedient, which enables the tower **170** to displace the delinker shaft **180** to the rear. Just forward from the collar **252**, the delinker shaft **180** has a small indent **254** on an underside thereof which receives an inter-locking pin **256** in an elevated position. When the inter-locking pin **256** is elevated, longitudinal movement of the tower **170** is coupled to that of the delinker shaft **180**. The inter-locking pin **256** is positioned in a vertical space formed in the tower **170** of the bolt carrier **160** which permits the pin to drop down when the pin reaches a flat or recessed section **258** formed on the feed rotor shaft **154**, as best seen in FIG. **4**A. There are two opposed recessed sections **258** to accommodate 180° rotation of the feed rotor shaft **154**. That is, as the bolt carrier tower **170** moves the delinker shaft **180** forward over the stationary feed rotor shaft **154**, eventually the tower reaches one of the recessed sections **258** and the pin **256** drops down. This movement disengages further forward movement of the tower **170** from the delinker shaft **180**, which is the position shown in FIGS. **4**A and **4**B. It is this decoupling of the delinker shaft **180** from movement of the bolt carrier **160** and bolt **184** which enables the receiver **112** of the gun to be made much shorter in axial length.

In addition, the moment that the pin **256** drops down into the recessed section **258** is the start of the pivoting of the feed cam **230** and thus movement of the feed shuttle **234**. That is, the feed cam drive roller **240** carried at the top of the tower **170** contacts a curved section of the contoured inner wall **238** of the feed cam **230** at the same time movement of the tower **170** disengages from movement of the delinker shaft **180**. The delinker shaft **180** thus remains stationary while the feed cam **230** and feed shuttle **234** deliver the next cartridge **118**.

FIGS. **16**A-**16**C showing sequential forward movement of the feed cam drive roller **240** within the inner channel **238** of the feed cam **230**. Since the drive roller **240** is carried longitudinally by the bolt carrier **160**, it travels in a linear path indicated by a dashed rectangle **257**. The drive roller **240** engages the contoured inner walls **238** and thus pivots the feed cam **230** about its rear pivot pin **236** fixed in the feed cover **120**, as shown.

The length of the delinker shaft **180** and extent of forward movement prior to disengagement from the tower **170** positions the delinker grabber **250** in line to capture the rear end of the next cartridge when it is displaced laterally by the feed shuttle **234**. Again, the lateral movement of the feed shuttle **234** is enabled by the camming action of the feed cam drive roller **240** against the contoured inner wall **238** of the feed cam **230**.

FIG. **5**A is a longitudinal sectional view and FIG. **5**B is a cutaway perspective view of the delinking and firing mechanism after further forward movement of the bolt carrier **160** and bolt **184** to the forward extent of their travels. With reference to FIG. **5**B, the action of the chain **144** is seen. Although not shown, the master link **244** and upward drive pin **242** turn the front left corner and continue traveling laterally along the channel **166** formed on the underside of the bolt carrier **160**. Movement of the bolt carrier **160** is halted or dwells in this stage.

FIG. **6**A is a longitudinal sectional view and FIG. **6**B is a cutaway perspective view of the mechanism during an operation step of laterally feeding a cartridge **118** from the ammunition belt of linked cartridges into engagement with the T-slot on the delinker grabber **250**. Initial rearward travel of the bolt carrier **160** causes the camming action of the feed cam drive roller **240** against the contoured inner wall **238** of the feed cam **230**, which pivots the feed cam to its original position.

FIG. **7**A is a longitudinal sectional view and FIG. **7**B is a cutaway perspective view of the delinking and firing mechanism during subsequent rearward movement of the bolt carrier **160** and bolt **184**. As the bolt carrier **160** moves rearward, at mid-travel the inter-locking pin **256** carried by the bolt carrier **160** reaches the end of the recessed section **258** on the feed rotor shaft **154**. A smoothly curved shoulder at the rear end of the recessed section **258** cams the inter-locking pin **256** back upward into the small indent **254** on the underside of the delinker shaft **180**, which has remained stationary during the back-and-forth movement of the bolt carrier tower **170**. At about the same time, the rear wall of the tower **170** engages the delinker collar **252** on the rear end of the delinker shaft. This re-engages the delinker shaft **180** with the tower **170** such that further rearward motion carries the delinker shaft **180** rearward. Rearward movement of the delinker shaft **180** removes a cartridge **118** to the rear from the belt of links **119**.

FIG. **8**A is a longitudinal sectional view and FIG. **8**B is a cutaway perspective view of the delinking and firing mechanism showing further rearward movement of the bolt carrier **160** and bolt **184** and delinker shaft **180** fully delinking the cartridge **118**. This reverts the components to the sear position, as seen in FIG. **3**A.

The reader will note that the master link **244** on the chain **144** is once again at the rear left corner on the rectangular chain path. The master link **244** has moved laterally from right-to-left in a CW direction which pauses movement of the bolt carrier **160**. However, the lower Geneva drive pin **246** (FIG. **3**A) enters one of the slots of the Geneva Drive **146**, which rotates the first pinion gear **150** 90° and the second pinion gear **152** 180°.

FIG. **9** is a longitudinal sectional view of the delinking and firing mechanism just prior to rotating the cartridge **118** to be chambered and fired. The feed rotor shaft **154** then rotates the feed rotor **156** which transfers the cartridge **118** from the delinked location downward into alignment with the bolt **184** and chamber **124**.

FIGS. **10**A and **10**B is a view after rotation of the feed rotor **156** to move the delinked cartridge **118** in line with the bolt **184** and into position to be chambered. The system components are dimensioned such that the rear flange of the cartridge **118** is captured by the three-pronged cartridge grasper **186** on the forward end of the bolt **184**. At this point, the master link **244** on the chain **144** is once again at the rear left corner on the rectangular chain path, in position to once again drive the bolt carrier **160** and bolt **184** forward.

FIG. **11** is a longitudinal sectional view of the delinking and firing mechanism during an operation step of a first round **118** being chambered. The bolt carrier **160** and bolt **184** are moved forward by the chain **144** which pushes the cartridge **118** through the breech **125** into the chamber **124**. This is essentially a repeat of the step of FIG. **4**A, though with a cartridge **118** now being chambered. The breech **125** has a tapered lead-in aperture on its rear wall **260** leading to an expanded cavity **262** within the breech. As seen in FIG. **10**B, the rear face **260** has three irregular lugs or cutouts **264** emanating outward from the central tapered lead-in aperture that permit passage of the three-pronged cartridge grasper **186** on the bolt **184**.

Ultimately, FIGS. **12**A and **12**B show the round **118** fully chambered. FIG. **13** shows a first round being fired and a second cartridge **118** being fed to the delinker. Reference to FIGS. **17-20** is once again necessary.

The rear end of the firing pin **188** includes a laterally-extending tang **216** that slides within a slot **219** in the lower rear end of the bolt carrier **160** (FIG. **18**B) and within a slot **218** (FIG. **20**A) formed in a rear end of the bolt **184**. As the bolt carrier **160** and bolt **184** move forward, a laterally-extending tang **216** at the rear of the firing pin **188** eventually contacts a fixed pawl **270** within the receiver **112**, as seen in FIG. **14**. Prior to this contact, the firing pin **188** is carried along within the bolt **184** by virtue of the interactions of the spring **190**, collar **210** and groove **212**. The pawl **270** temporarily prevents further forward movement of the firing pin. However, the rest of the bolt **184** and carrier assembly continues forward a short distance, about ½ inch. During this movement, collar **210** which is locked to the firing pin **188** by a circlip in groove **212** (see FIG. **20**C) is pulled back from its position against the cam pin **202** (see FIG. **19**B), which compresses the firing pin spring **190**.

Contact between the front end of the bolt **184** and the rear of the breech **125** occurs just prior to full forward travel of the bolt carrier **160**, driven by the chain **144**. That is, the bolt carrier **160** continues to move forward after the bolt **184** stops. The three-pronged cartridge grasper **186** on the bolt **184** passes through the aligned cutouts **264** and contacts the rear of the barrel **124**. The bolt **184** then stops moving linearly but is forced to rotate by relative sliding movement of the bolt carrier **160** and its longitudinal tube **162** thereover. Further longitudinal movement of the longitudinal tube **162** and specifically the cam slots **204** therein act on the cam pin **202**.

With reference to FIGS. **18**B and **19**A, the cam slots **204** are angled to rotate the cam pin **202** and bolt **184** a small angular amount, which causes the bolt **184** to rotate to a locked position. That is, the three-pronged cartridge grasper **186** rotates to a position behind the rear wall **260** within the expanded cavity **262**, thus sealing the cartridge within the breech **125**. Specifically, the cam pin **202** initially resides in the forward angled portions **206** of the carrier cam slots **204**. As the carrier **160** moves forward, the cam pin **202** is guided by the angled portions **206** toward the longitudinally-oriented portions of the cam slots **204**, thus rotating the cam pin **202** and bolt **184**.

This does two things. First, the three-pronged cartridge grasper **186** on the bolt **184** is rotated in the cavity **262** behind the rear wall **260** of the breech **125**, thus locking the bolt and breech together. Secondly, the firing pin tang **216** rotates out of engagement with the pawl **270** and into the slot **218** (FIG. **20**A), freeing up the firing pin to launch forward. As it is released by the pawl **270**, the firing pin **188** snaps forward under the built-up force of the spring **190**. Full compression of the firing pin spring **190** is attained just as the bolt **184** is rotated to its fully locked position. Simultaneous rotation of the firing pin tang **216** off the firing pin pawl **270** permits the firing pin **188** to spring forward such that the forward nose **196** pistons through the firing pin bore **194** and strikes the primer of the round, causing it to fire.

Following firing of a cartridge, the chain **146** continues to turn and eventually pulls the carrier **160** back to the rear. This rotates the bolt **184** to an unlocked position through a reverse camming sequence between the cam slots **204** and the cam pin **202**, until the carrier **160** again moves linearly in synch with the bolt **184**. The bolt **184** pulls the spent cartridge shell free from the breech **125** whereupon it is ejected via a mechanism that will not be described herein.

In the rear cartridge removal system described herein, the delinker is slidably attached to the bolt and carrier assembly so that its travel can be controllably timed and limited in relation to the motion of the bolt assembly. The delinker shaft is hexagonal in cross section to prevent rotation, and passes through a mating hexagonal hole in the bolt carrier. The forward and aft position of the delinker is controlled by a vertically sliding pin which engages a recess in the hex shaft and also rides against the outside of the rotor shaft which is parallel to the delinker. The rotor and rotor shaft are fixed in the fore and aft direction but rotate to deliver rounds from the delinker to the bolt during the feed process.

As the bolt and carrier assembly move forward to the firing and feeding position, the front of the delinker contacts the back of the feed tray. At the same time the vertically positioned locking pin is allowed to move out of its holding position and to move downward into a recess in the feed rotor shaft. In doing so it is decoupled from the motion of the bolt and carrier assy. That assembly is now free to continue forward and to lock and fire. At the same time as that is happening, the feed cam is moving a shuttle to feed the next round into the delinker for the next cycle.

After firing, the bolt assembly moves to the rear, free from the delinker until a collar on the aft end of the delinker shaft contacts the back of the bolt carrier and the locking pin which had been cammed into the rotor shaft is cammed back into the delinker shaft. At this point the delinking of the new round is started and the round is pulled back into a cavity in the feed rotor, ready to be rotated down into the bolt face.

Anti Hangfire System

In the past certain externally powered guns have incorporated an anti-hangfire system to protect the gunner and the gun itself from the disastrous effects of the delayed functioning or hangfire of a fired round of ammunition. Since an externally powered gun does not depend upon the gas pressure or the recoil force of the fired round to function the mechanism, it can open the breech/bolt mechanism prior to the functioning of the round. If the round fires at that time the explosive force will not be container within the gun but will blow powder and case fragments out of the gun in possibly hurt the gunner and the weapon itself. To prevent this, a system was previously disclosed in U.S. Pat. No. 4,301,709 through the use of a somewhat complex linkage system, and a solenoid was capable of preventing the possibility of a hang fire damaging the gunner or the system itself. While this system functioned well it was complex and required very close tolerances, was prone to malfunctions and was costly to build and difficult to integrate into the gun mechanism.

The anti-hang fire system presented here does away with all of the mechanical moving parts associated with the old system and replaces them with a single electronic proximity sensor and a logic circuit, working in conjunction with an already existing gun part, the firing pin.

FIG. **14** is a perspective view cutaway along a lateral vertical section through the delinking and firing mechanism showing a rear end of the bolt assembly and an anti-hang fire mechanism that eliminates the hazards of a delayed functioning, or hangfire, of a fired round of ammunition.

FIGS. **15**A-**15**D are enlarged views of a rear end of a firing pin and firing pin tang which rotates to ensure that there is no delayed functioning, or hangfire, of a fired round of ammunition.

The functioning of this system is described as follows:

Located in the receiver below the tang **216** of the firing pin **188**, and at the end of its forward travel is a proximity sensor **272** which can sense the presence of the firing pin tang. The only time it can sense the tang is at the moment of primer strike. It is therefore a positive indication of the attempt to fire the round. Simultaneously, a 0.006 second timer is started in the logic circuit.

At this point one of two things occur. Either the round fires or it does not fire. If the round fires, the combination of barrel breech **125** and bolt **184** and firing pin **188** recoils towards the rear of the gun. This immediately moves the firing pin tang **216** away from the sensor **272** in the receiver **212** which remains stationary relative to the recoiling parts. This turns off the sensor **272** which tells the logic circuit that the round has fired, the timer is shut off, and the gun continues to fire.

The second thing that can happen is that the round does not fire and the barrel etc. does not recoil. The tang **216** of the firing pin **188** thus stays within the sensing distance of the proximity sensor **272**. In this case the timer times out and the logic circuit shuts off the drive motor and initiates a dynamic brake to immediately stop the gun prior to the opening of the breech **125**. The dwell of the bolt and carrier assembly in the locked position is sufficiently long to allow this to happen without the possibility of the bolt opening.

The use of the firing pin tang **216** as the principle indicator of the status of the firing of the gun eliminates the need for five mechanical parts, two springs, and a solenoid plus associated extra machining of the receiver and other parts, plus the space weight and power of the system, further reducing the overall gun size.

An adjunct to the above system is anticipated in the case of a gun which does not have a recoil system. In that case the firing pin **188** would not move away from the proximity sensor **272** upon firing. In that case an accelerometer would be attached to the receiver to sense the existence of a firing pulse. The firing pulse is significantly different than other accelerations experienced by the parent vehicle. In addition, only accelerations felt immediately after [within 0.006 sec] the firing pin tang is sensed by the proximity sensor **272** would be considered. All other acceleration signals will be filtered out by the logic circuit.

Those skilled in the art will appreciate that various changes and modifications may be made to the preferred embodiments, the invention in its broader aspects is not limited to the specific details, representative devices, and illustrative examples shown and described.

It is claimed:

1. A method of operating a rearward-stripping externally-powered gun, the gun having a receiver at the rear end of a longitudinal barrel, the receiver having a motor and motor drive system and being configured to laterally receive a plurality of cartridges held within a series of connected links with a rear base of the cartridges facing to the rear, the method comprises:

driving a bolt carrier longitudinally forward and rearward by the motor drive system, the bolt carrier having a longitudinal tube and tower extending perpendicularly away from the tube, a bolt being positioned within the longitudinal tube of the bolt carrier and having a forward end with a cartridge grasper adapted to engage the rear base of a cartridge, the bolt being aligned with a breech and chamber of the barrel;

translating the cartridges laterally through the receiver;

translating a delinker shaft arranged in the receiver longitudinally toward and away from the cartridges held within the connected links, the delinker shaft having a forward end adapted to engage the rear base of a cartridge and remove one cartridge at a time from the connected links, the delinker shaft passing through a delinker bore in the bolt carrier tower, wherein the delinker shaft is coupled by a lock member to periodically translate with the bolt carrier tower;

rotating a feed rotor about a longitudinal axis, the feed rotor being configured to transfer a cartridge from a delinked position engaged with the delinker shaft to a load position whereby the cartridge is engaged by the cartridge grasper of the bolt; and

translating the bolt carrier forward until the delinker shaft is in position to engage the rear base of a cartridge, whereby the lock member decouples further forward translation of the delinker shaft from the bolt carrier, and the bolt carrier continues forward to displace the bolt and a cartridge engaged thereby forward and deliver the cartridge to the chamber to be fired.

2. The method of claim 1, wherein the receiver has a feed shuttle adapted to translate the cartridges laterally through the receiver, the feed shuttle being connected to be actuated by a feed cam pivoted by a feed cam roller fixed to the bolt carrier tower.

3. The method of claim 1, wherein the delinker shaft and delinker bore in the bolt carrier tower are cooperatively formed to prevent relative rotation of the delinker shaft in the delinker bore.

4. The method of claim 1, wherein the feed rotor mounts to a feed rotor shaft that is fixed longitudinally within the receiver and passes through a throughbore in the bolt carrier tower located between the delinker bore and longitudinal tube of the bolt carrier, the feed rotor shaft being rotatable within the throughbore and having oppositely-directed recessed sections therein, wherein the lock member is configured to drop into one of the recessed sections and decouple forward translation of the delinker shaft from the bolt carrier.

5. The method of claim 4, wherein the feed rotor shaft is driven by a feed rotor drive system driven by the motor drive system that periodically rotates the feed rotor to transfer a cartridge from the delinked position to the load position.

6. The method of claim 5, wherein the motor drive system is a chain drive and the feed rotor drive system includes a Geneva Drive periodically rotated by the chain drive, the Geneva Drive being connected to a gear at a rear end of the feed rotor shaft.

7. The method of claim 4, wherein the recessed sections each have a rounded rear end that cams the lock member upward into a recess in the delinker shaft and recouples translation of the delinker shaft to the bolt carrier when the bolt carrier tower moves rearward.

8. The method of claim 7, wherein the delinker shaft has a rear collar which is engaged by the delinker bore in the bolt carrier tower when the bolt carrier tower moves rearward.

9. The method of claim 1, wherein the bolt carries a firing pin in a longitudinal passage therein, the firing pin having a rear tang extending laterally therefrom, and wherein forward movement of the bolt carrier and bolt eventually causes the rear tang to contact a pawl fixed in the receiver and temporarily stop forward movement of the firing pin, the bolt further housing a firing spring which is extended when forward movement of the firing pin is temporarily stopped, the bolt carrier having a cam recess that engages and rotates a cam pin through the bolt to disengage the rear tang from the pawl and release the firing pin to move forward under influence of the firing spring and fire the cartridge.

10. The method of claim 9, wherein the receiver has a proximity sensor located adjacent a slot at a rear end of the bolt carrier and in a path of movement of the rear tang, wherein the rear tang actuates the proximity sensor, and the receiver contains an electric circuit and logic with a timer, wherein the logic circuit is configured to shut off the drive motor and initiate a dynamic brake to immediately stop the gun prior to opening of the breech if the rear tang does not move away from the proximity sensor within a predetermined time period.

11. The method of claim 1, wherein the receiver has a receiver mounting length RML defined as the distance from the rear base of each incoming cartridge in the connected links to the rear end of the receiver that is less than 15 inches.

12. A method of operating a rearward-stripping externally-powered gun, the gun having a receiver at the rear end of a longitudinal barrel, the receiver having a motor and motor drive system and being configured to laterally receive a plurality of cartridges held within a series of connected links with a rear base of the cartridges facing to the rear, the method comprises:

driving a bolt carrier longitudinally forward and rearward with the motor drive system, the bolt carrier carrying a bolt having a forward end with a cartridge grasper adapted to engage the rear base of a cartridge, the bolt being aligned with a breech and chamber of the barrel;

translating the cartridges laterally through the receiver;

translating a delinker shaft longitudinally forward and rearward with the bolt carrier, the delinker shaft having a forward end adapted to engage the rear base of a cartridge and remove one cartridge at a time from the connected links when translated rearward, the delinker shaft being coupled by a movable lock member to periodically translate with the bolt carrier, wherein the bolt carrier translates the delinker shaft forward until the delinker shaft is in position to engage the rear base of a cartridge, whereby the lock member moves and decouples further forward translation of the delinker shaft from the bolt carrier, and the bolt carrier continues forward to displace the bolt and a cartridge engaged thereby forward and deliver the cartridge to the chamber to be fired; and

periodically rotating a feed rotor about a longitudinal axis with the motor drive system, the feed rotor being configured to transfer a cartridge from a delinked

position engaged with the delinker shaft to a load position whereby the cartridge is engaged by the cartridge grasper of the bolt.

13. The method of claim **12**, wherein the receiver has a feed shuttle adapted to translate the cartridges laterally through the receiver, the feed shuttle being connected to be actuated by a feed cam pivoted by a feed cam roller fixed to the bolt carrier.

14. The method of claim **12**, wherein the bolt carrier has a longitudinal tube and tower extending perpendicularly away from the tube, the bolt being positioned within the longitudinal tube, and the delinker shaft passes through a delinker bore in the bolt carrier tower and is prevented from relative rotation therein.

15. The method of claim **14**, wherein the feed rotor mounts to a feed rotor shaft that is fixed longitudinally within the receiver and passes through a throughbore in the bolt carrier tower located between the delinker bore and longitudinal tube of the bolt carrier, the feed rotor shaft being rotatable within the throughbore and having oppositely-directed recessed sections therein, wherein the lock member is configured to drop into one of the recessed sections and decouple forward translation of the delinker shaft from the bolt carrier.

16. The method of claim **15**, wherein the feed rotor shaft is driven by a feed rotor drive system driven by the motor drive system that periodically rotates the feed rotor to transfer a cartridge from the delinked position to the load position.

17. The method of claim **16**, wherein the motor drive system is a chain drive and the feed rotor drive system includes a Geneva Drive periodically rotated by the chain drive, the Geneva Drive being connected to a gear at a rear end of the feed rotor shaft.

18. The method of claim **15**, wherein the recessed sections each have a rounded rear end that cams the lock member upward into a recess in the delinker shaft and recouples translation of the delinker shaft to the bolt carrier when the bolt carrier tower moves rearward.

19. The method of claim **18**, wherein the delinker shaft has a rear collar which is engaged by the delinker bore in the bolt carrier tower when the bolt carrier tower moves rearward.

20. The method of claim **12**, wherein the bolt carries a firing pin in a longitudinal passage therein, the firing pin having a rear tang extending laterally therefrom, and wherein forward movement of the bolt carrier and bolt eventually causes the rear tang to contact a pawl fixed in the receiver and temporarily stop forward movement of the firing pin, the bolt further housing a firing spring which is extended when forward movement of the firing pin is temporarily stopped, the bolt carrier having a cam recess that engages and rotates a cam pin through the bolt to disengage the rear tang from the pawl and release the firing pin to move forward under influence of the firing spring and fire the cartridge.

21. The method of claim **20**, wherein the receiver has a proximity sensor located adjacent a slot at a rear end of the bolt carrier and in a path of movement of the rear tang, wherein the rear tang actuates the proximity sensor, and the receiver contains an electric circuit and logic with a timer, wherein the logic circuit is configured to shut off the drive motor and initiate a dynamic brake to immediately stop the gun prior to opening of the breech if the rear tang does not move away from the proximity sensor within a predetermined time period.

22. The method of claim **12**, wherein the receiver has a receiver mounting length RML defined as the distance from the rear base of each incoming cartridge in the connected links to the rear end of the receiver that is less than 15 inches.

* * * * *